Product data sheet

Specifications

Green Premium™

interface plug-in relay, Harmony electromechanical relays, 12A, 1CO, 24V DC

RSB1A120BD

Product availability: Stock - Normally stocked in distribution facility

Price*: 4.27 USD

Main

Range Of Product	Harmony Electromechanical Relays
Series Name	Interface relay
Product Or Component Type	Plug-in relay
Device Short Name	RSB
Contacts Type And Composition	1 C/O
Contact Operation	Standard
[Uc] Control Circuit Voltage	24 V DC
[Ithe] Conventional Enclosed Thermal Current	12 A -40…104 °F (-40…40 °C)
Status Led	Without
Control Type	Without push-button

Complementary

Shape Of Pin	Flat (PCB type)
Average Coil Resistance	1440 Ohm AC 20 °C +/- 10 %
[Ue] Rated Operational Voltage	16.8...36 V DC
[Ui] Rated Insulation Voltage	400 V IEC 60947
[Uimp] Rated Impulse Withstand Voltage	3.6 kV IEC 61000-4-5
Contacts Material	Silver alloy (AgNi)
[Ie] Rated Operational Current	12 A AC-1/DC-1) NO IEC 6 A AC-1/DC-1) NC IEC
Minimum Switching Current	10 mA
Maximum Switching Voltage	300 V DC IEC
Minimum Switching Voltage	12 V
Maximum Switching Capacity	3000 VA/336 W
Resistive Rated Load	12 A 250 V AC 12 A 28 V DC
Minimum Switching Capacity	120 mW 10 mA, 12 V
Operating Rate	<= 600 cycles/hour under load <= 18000 cycles/hour no-load
Mechanical Durability	30000000 cycles

Price is “List Price” and may be subject to a trade discount – check with your local distributor or retailer for actual price.

Disclaimer: This documentation is not intended as a substitute for and is not to be used for determining suitability or reliability of these products for specific user applications

Electrical Durability	100000 cycles, 12 A at 250 V, AC-1 NO 100000 cycles, 6 A at 250 V, AC-1 NC
Operating Time	20 ms operating 20 ms reset
Average Coil Consumption	0.45 W DC
Drop-Out Voltage Threshold	>= 0.1 Uc DC
Safety Reliability Data	B10d = 100000
Protection Category	RT I
Test Levels	Level A group mounting
Operating Position	Any position
Net Weight	0.03 lb(US) (0.014 kg)
Sale Per Indivisible Quantity	10
Device Presentation	Complete product

Environment

Dielectric Strength	1000 V AC between contacts 2500 V AC between poles 5000 V AC between coil and contact
Standards	CSA C22.2 No 14 UL 508 IEC 61810-1
Product Certifications	UL CSA EAC
Ambient Air Temperature For Storage	-40…185 °F (-40…85 °C)
Vibration Resistance	+/- 1 mm 10…55 Hz)IEC 60068-2-6
Ip Degree Of Protection	IP40 conforming to IEC 60529
Shock Resistance	10 gn 11 ms) not operating IEC 60068-2-27 5 gn 11 ms) in operation IEC 60068-2-27
Ambient Air Temperature For Operation	-40…185 °F (-40…85 °C) DC)

Ordering and shipping details

Category	US10CP221127
Discount Schedule	0CP2
Gtin	3389110254136
Returnability	Yes
Country Of Origin	PL

Packing Units

Unit Type Of Package 1	PCE
Number Of Units In Package 1	1
Package 1 Height	0.71 in (1.800 cm)
Package 1 Width	0.79 in (2.000 cm)
Package 1 Length	1.14 in (2.900 cm)
Package 1 Weight	0.46 oz (13.000 g)
Unit Type Of Package 2	BB1

Number Of Units In Package 2	10
Package 2 Height	0.67 in (1.700 cm)
Package 2 Width	0.98 in (2.500 cm)
Package 2 Length	12.20 in (31.000 cm)
Package 2 Weight	5.01 oz (142.000 g)
Unit Type Of Package 3	S01
Number Of Units In Package 3	350
Package 3 Height	5.91 in (15.000 cm)
Package 3 Width	5.91 in (15.000 cm)
Package 3 Length	15.75 in (40.000 cm)
Package 3 Weight	11.41 lb(US) (5.175 kg)

Contractual warranty

Warranty	18 months

Sustainability

Green Premium™ label is Schneider Electric's commitment to delivering products with best-in-class environmental performance. Green Premium promises compliance with the latest regulations, transparency on environmental impacts, as well as circular and low-CO_2 products.

Guide to assessing product sustainability is a white paper that clarifies global eco-label standards and how to interpret environmental declarations.

Learn more about Green Premium >

Guide to assess a product's sustainability >

Transparency RoHS/REACh

Well-being performance

Toxic Heavy Metal Free	
Mercury Free	
Rohs Exemption Information	Yes

Certifications & Standards

Reach Regulation	REACh Declaration
Eu Rohs Directive	Pro-active compliance (Product out of EU RoHS legal scope) EU RoHS Declaration
China Rohs Regulation	China RoHS declaration
Environmental Disclosure	Product Environmental Profile
Weee	The product must be disposed on European Union markets following specific waste collection and never end up in rubbish bins.
Circularity Profile	No need of specific recycling operations
California Proposition 65	WARNING: This product can expose you to chemicals including: Nickel compounds, which is known to the State of California to cause cancer, and Di-isodecyl phthalate (DIDP), which is known to the State of California to cause birth defects or other reproductive harm. For more information go to www.P65Warnings.ca.gov

Dimensions Drawings

Dimensions

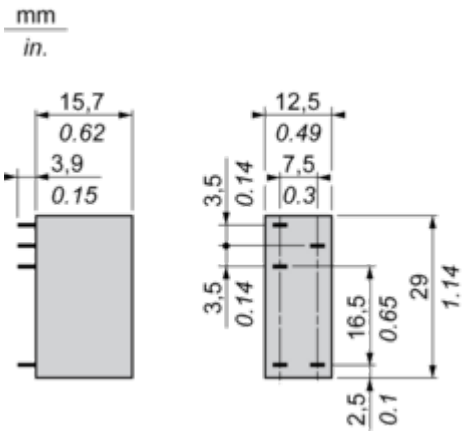

Connections and Schema

Wiring Diagram

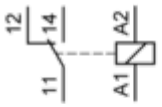

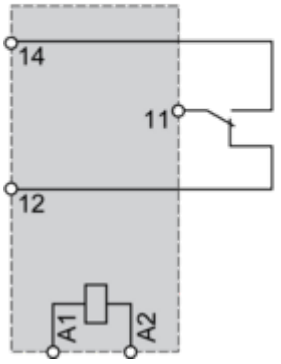

NOTE: For DC input, A1 have to be +, otherwise it would short circuit from protection module

Performance Curves

Electrical Durability of Contacts

Durability (inductive load) = durability (resistive load) x reduction coefficient.
Resistive AC load

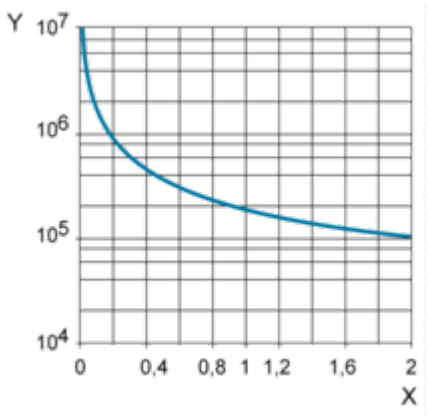

X Switching capacity (kVA)
Y Durability (Number of operating cycles)
Reduction coefficient for inductive AC load (depending on power factor cos ϕ)

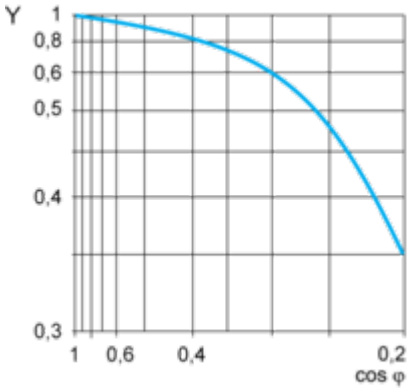

Y Reduction coefficient (A)
Maximum switching capacity on resistive DC load

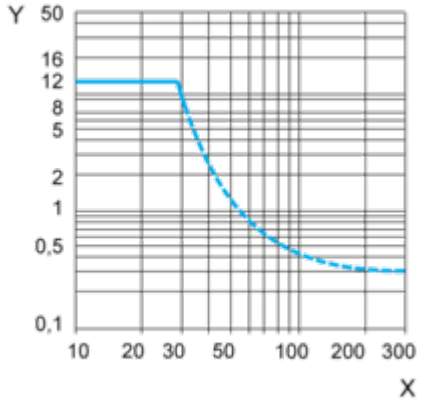

X Voltage DC
Y Current DC
Note : These are typical curves, actual durability depends on load, environment, duty cycle, etc.