# Product data sheet

Specifications

Green Premium™

## Interface plug-in relay, 12 A, 1 CO, 60 V DC

RSB1A120ND

Discontinued on: Dec 2, 2020

End-of-service on: Dec 31, 2020

Discontinued

**Product availability: Non-Stock - Not normally stocked in distribution facility**

## Main

| | |
|---|---|
| **Range Of Product** | Harmony Relay |
| **Series Name** | Interface relay |
| **Product Or Component Type** | Plug-in relay |
| **Device Short Name** | RSB |
| **Contacts Type And Composition** | 1 C/O |
| **Contact Operation** | Standard |
| **[Uc] Control Circuit Voltage** | 60 V DC |
| **[Ithe] Conventional Enclosed Thermal Current** | 12 A -40…104 °F (-40…40 °C) |
| **Status Led** | Without |
| **Control Type** | Without push-button |

## Complementary

| | |
|---|---|
| **Shape Of Pin** | Flat (PCB type) |
| **Average Coil Resistance** | 9000 Ohm AC 20 °C +/- 10 % |
| **[Ue] Rated Operational Voltage** | 42...90 V DC |
| **[Ui] Rated Insulation Voltage** | 400 V IEC 60947 |
| **[Uimp] Rated Impulse Withstand Voltage** | 3.6 kV IEC 61000-4-5 |
| **Contacts Material** | Silver alloy (AgNi) |
| **[Ie] Rated Operational Current** | 12 A AC-1/DC-1) NO IEC<br>6 A AC-1/DC-1) NC IEC |
| **Minimum Switching Current** | 10 mA |
| **Maximum Switching Voltage** | 300 V DC IEC |
| **Minimum Switching Voltage** | 12 V |
| **Maximum Switching Capacity** | 3000 VA/336 W |
| **Resistive Rated Load** | 12 A 250 V AC<br>12 A 28 V DC |
| **Minimum Switching Capacity** | 120 mW 10 mA, 12 V |
| **Operating Rate** | <= 600 cycles/hour under load<br><= 18000 cycles/hour no-load |
| **Mechanical Durability** | 30000000 cycles |

Price is “List Price” and may be subject to a trade discount – check with your local distributor or retailer for actual price.

Disclaimer: This documentation is not intended as a substitute for and is not to be used for determining suitability or reliability of these products for specific user applications

| | |
|---|---|
| **Electrical Durability** | 100000 cycles, 12 A at 250 V, AC-1 NO<br>100000 cycles, 6 A at 250 V, AC-1 NC |
| **Operating Time** | 20 ms operating<br>20 ms reset |
| **Marking** | CE |
| **Average Coil Consumption** | 0.45 W DC |
| **Drop-Out Voltage Threshold** | >= 0.1 Uc DC |
| **Safety Reliability Data** | B10d = 100000 |
| **Protection Category** | RT I |
| **Test Levels** | Level A group mounting |
| **Operating Position** | Any position |
| **Net Weight** | 0.03 lb(US) (0.014 kg) |
| **Sale Per Indivisible Quantity** | 10 |
| **Device Presentation** | Complete product |

## Environment

| | |
|---|---|
| **Dielectric Strength** | 1000 V AC between contacts<br>2500 V AC between poles<br>5000 V AC between coil and contact |
| **Standards** | IEC 61810-1<br>CSA C22.2 No 14<br>UL 508 |
| **Product Certifications** | CSA<br>UL<br>EAC |
| **Ambient Air Temperature For Storage** | -40…185 °F (-40…85 °C) |
| **Vibration Resistance** | +/- 1 mm 10…55 Hz)IEC 60068-2-6 |
| **Ip Degree Of Protection** | IP40 conforming to IEC 60529 |
| **Shock Resistance** | 10 gn 11 ms) not operating IEC 60068-2-27<br>5 gn 11 ms) in operation IEC 60068-2-27 |
| **Ambient Air Temperature For Operation** | -40…185 °F (-40…85 °C) DC) |

## Ordering and shipping details

| | |
|---|---|
| **Category** | US10CP221127 |
| **Discount Schedule** | 0CP2 |
| **Gtin** | 3389110254174 |
| **Returnability** | No |
| **Country Of Origin** | AT |

## Packing Units

| | |
|---|---|
| **Unit Type Of Package 1** | PCE |
| **Number Of Units In Package 1** | 1 |
| **Package 1 Height** | 0.67 in (1.7 cm) |
| **Package 1 Width** | 0.98 in (2.5 cm) |
| **Package 1 Length** | 1.22 in (3.1 cm) |
| **Package 1 Weight** | 0.53 oz (15 g) |

## Contractual warranty

| | |
|---|---|
| **Warranty** | 18 months |

## Sustainability

**Green Premium™ label** is Schneider Electric's commitment to delivering products with best-in-class environmental performance. Green Premium promises compliance with the latest regulations, transparency on environmental impacts, as well as circular and low-$CO_2$ products.

**Guide to assessing product sustainability** is a white paper that clarifies global eco-label standards and how to interpret environmental declarations.

Learn more about Green Premium >

Guide to assess a product's sustainability >

Transparency RoHS/REACh

## Well-being performance

| | |
|---|---|
| Toxic Heavy Metal Free | |
| Mercury Free | |
| Rohs Exemption Information | Yes |

## Certifications & Standards

| | |
|---|---|
| **Reach Regulation** | REACh Declaration |
| **Eu Rohs Directive** | Pro-active compliance (Product out of EU RoHS legal scope)<br>EU RoHS Declaration |
| **China Rohs Regulation** | China RoHS declaration |
| **Environmental Disclosure** | Product Environmental Profile |
| **Weee** | The product must be disposed on European Union markets following specific waste collection and never end up in rubbish bins. |
| **Circularity Profile** | No need of specific recycling operations |
| **California Proposition 65** | WARNING: This product can expose you to chemicals including: Nickel compounds, which is known to the State of California to cause cancer, and Di-isodecyl phthalate (DIDP), which is known to the State of California to cause birth defects or other reproductive harm. For more information go to www.P65Warnings.ca.gov |

Dimensions Drawings

## Dimensions

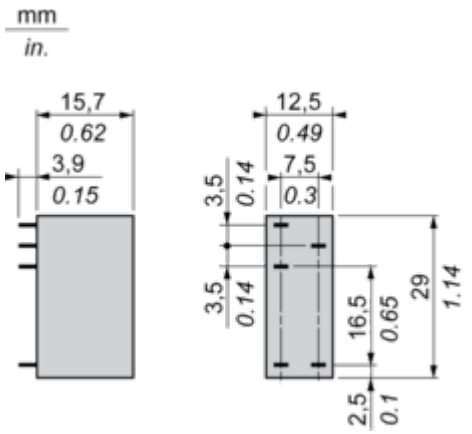

Connections and Schema

**Wiring Diagram**

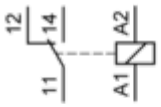


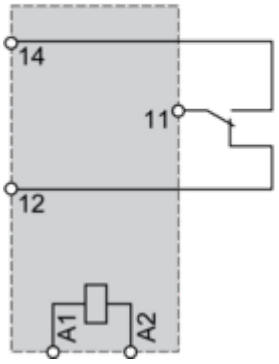


**NOTE:** For DC input, A1 have to be +, otherwise it would short circuit from protection module

## Performance Curves

### Electrical Durability of Contacts

**Durability (inductive load) = durability (resistive load) x reduction coefficient.**
Resistive AC load

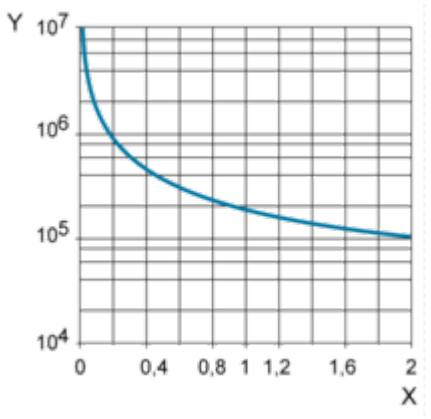


**X** Switching capacity (kVA)
**Y** Durability (Number of operating cycles)
Reduction coefficient for inductive AC load (depending on power factor cos ϕ)

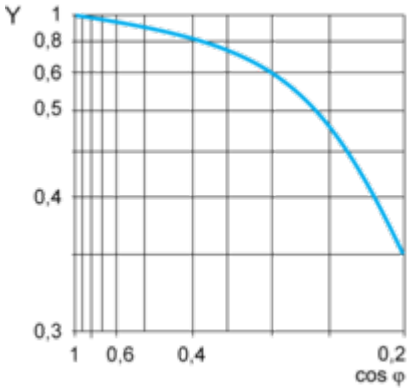


**Y** Reduction coefficient (A)
Maximum switching capacity on resistive DC load

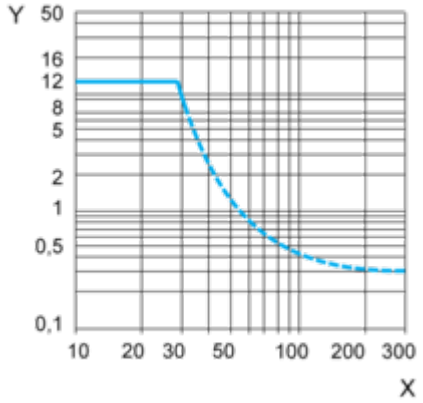


**X** Voltage DC
**Y** Current DC
**Note :** These are typical curves, actual durability depends on load, environment, duty cycle, etc.