Product data sheet

Specifications

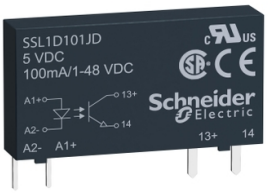

plug in relay, Harmony Solid State Slim Relays, 0.1A, DC switching, input 3 to 12V DC, output 1 to 48V DC

SSL1D101JD

Product availability: Non-Stock - Not normally stocked in distribution facility

Price*: 9.90 USD

Main

Range Of Product	Harmony Solid State Relays
Product Or Component Type	Solid state relay up to 10 A
Device Short Name	SSL
Phase	1 phase
Output Switching Mode	DC switching

Complementary

Mounting Support	Socket
Line Rated Current	0.1 A
Output Voltage	1...48 V DC
[Uc] Control Circuit Voltage	3...12 V DC
Capacitance Unbalance	1.5 pF input/output
Minimum Switching Voltage	3 V DC turn-on
Maximum Switching Voltage	1 V DC turn-off
Input Current Limits	4 mA
Input Impedance	1250 Ohm
Solid State Output Type	Transistor output DC switching
Load Current	0.001…0.1 A
Tansient Overvoltage	60 V DC
Maximum Operating Frequency	500 Hz
Surge Current	0.3 A 10 ms
Maximum Voltage Drop	<1 V on-state
Maximum Leakage Current	0.001 mA off-state
Response Time	0.02 ms (turn-on) 0.13 ms (turn-off)
Overvoltage Category	III
Width	0.20 in (5 mm)
Height	1.10 in (28 mm)
Depth	0.59 in (15 mm)

Price is “List Price” and may be subject to a trade discount – check with your local distributor or retailer for actual price.

Disclaimer: This documentation is not intended as a substitute for and is not to be used for determining suitability or reliability of these products for specific user applications

Net Weight	0.01 lb(US) (0.0041 kg)

Environment

Flame Retardance	V0 conforming to UL 94
Dielectric Strength	3750 V for input/output
Pollution Degree	2
Product Certifications	UL CSA
Marking	CE
Ambient Air Temperature For Operation	-4…176 °F (-20…80 °C)
Ambient Air Temperature For Storage	-4…185 °F (-20…85 °C)

Ordering and shipping details

Category	US10CP222375
Discount Schedule	0CP2
Gtin	3606480579677
Returnability	No
Country Of Origin	MX

Packing Units

Unit Type Of Package 1	PCE
Number Of Units In Package 1	1
Package 1 Height	0.28 in (0.7 cm)
Package 1 Width	0.98 in (2.5 cm)
Package 1 Length	14.57 in (37 cm)
Package 1 Weight	0.18 oz (5 g)
Unit Type Of Package 2	BB1
Number Of Units In Package 2	12
Package 2 Height	0.28 in (0.7 cm)
Package 2 Width	0.98 in (2.5 cm)
Package 2 Length	14.57 in (37 cm)
Package 2 Weight	2.12 oz (60 g)
Unit Type Of Package 3	S01
Number Of Units In Package 3	1080
Package 3 Height	5.91 in (15 cm)
Package 3 Width	5.91 in (15 cm)
Package 3 Length	15.75 in (40 cm)
Package 3 Weight	12.53 lb(US) (5.684 kg)

Sustainability

Green Premium™ label is Schneider Electric's commitment to delivering products with best-in-class environmental performance. Green Premium promises compliance with the latest regulations, transparency on environmental impacts, as well as circular and low-CO_2 products.

Guide to assessing product sustainability is a white paper that clarifies global eco-label standards and how to interpret environmental declarations.

Learn more about Green Premium >

Guide to assess a product's sustainability >

Transparency RoHS/REACh

Well-being performance

Reach Free Of Svhc	
Toxic Heavy Metal Free	
Mercury Free	
Rohs Exemption Information	Yes

Certifications & Standards

Reach Regulation	REACh Declaration
Eu Rohs Directive	Pro-active compliance (Product out of EU RoHS legal scope) EU RoHS Declaration
China Rohs Regulation	China RoHS declaration
Environmental Disclosure	Product Environmental Profile
Circularity Profile	End of Life Information
California Proposition 65	WARNING: This product can expose you to chemicals including: Lead and lead compounds, which is known to the State of California to cause cancer and birth defects or other reproductive harm. For more information go to www.P65Warnings.ca.gov

Dimensions Drawings

Dimensions

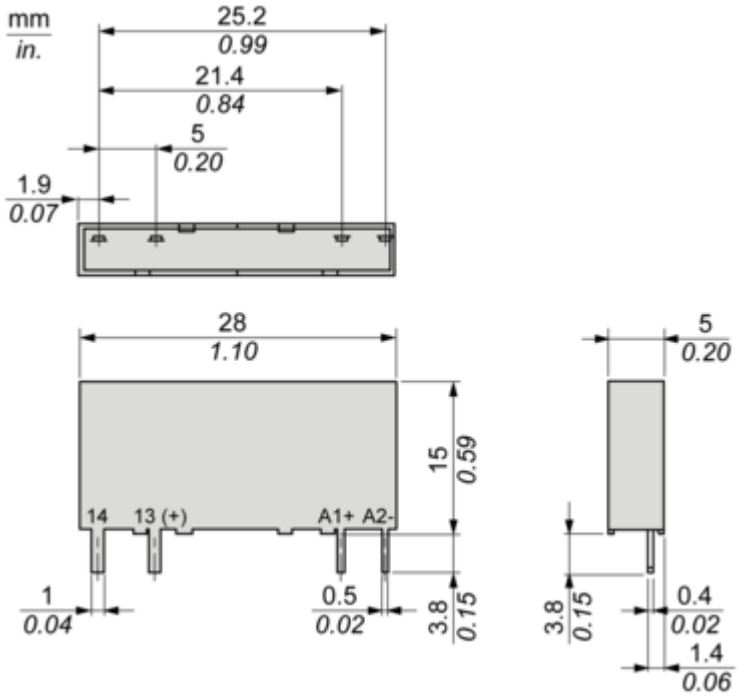

Performance Curves

Derating Curves

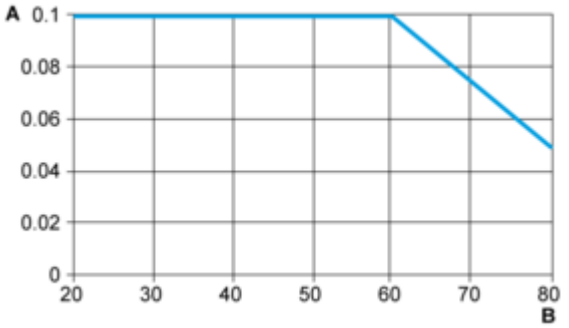

A : Load Current (Amperes)
B : Ambient Temperature (°C)