Product data sheet

Specifications

Green Premium™

Discontinued

Harmony, Solid state modular relay, 20 A, DIN rail mount, zero voltage switching, input 4â€¦32 V DC, output 24â€¦280 V AC

SSM1A120BD

Discontinued on: Mar 31, 2023

Product availability: Non-Stock - Not normally stocked in distribution facility

Main

Range Of Product	Harmony Solid State Relays
Product Or Component Type	Solid state relay up to 20 A
Device Short Name	SSM1
Number Of Phases	1 phase
Output Switching Mode	Zero voltage switching

Complementary

Mounting Support	Symmetrical DIN rail
Line Rated Current	20 A
Output Voltage	24...280 V AC
[Uc] Control Circuit Voltage	4...32 V DC
Tightening Torque	0.6...0.7 N.m for input 1.36...1.7 N.m for output
Connections - Terminals	Screw terminals 1 x 0.2...1 x 5.3 mm², AWG 24...AWG 10) input Screw terminals 1 x 0.2...1 x 5.3 mm², AWG 24...AWG 10) output
Maximum Capacitance	8 pF for input/output
Insulation Resistance	1000 MOhm at 500 V DC
Local Signalling	for input status LED (green)
Switching Voltage	4 V DC turn-on 1 V DC turn-off
Input Current	8…12 mA
Solid State Output Type	SCR output Zero voltage switching
Load Current	0.15…20 A
Transient Overvoltage	600 V
Surge Current	250 A 16.6 ms
Maximum Voltage Drop	<1.6 V on-state
Maximum I²T For Fusing	260 A².s for 8.3 ms
Maximum Leakage Current	10 mA off-state
Dv/Dt	500 V/µs off-state at maximum voltage

Price is “List Price” and may be subject to a trade discount – check with your local distributor or retailer for actual price.

Disclaimer: This documentation is not intended as a substitute for and is not to be used for determining suitability or reliability of these products for specific user applications

Response Time	0.5 cycle (turn-on) 0.5 cycle (turn-off)
Overvoltage Category	III
Net Weight	0.62 lb(US) (0.28 kg)

Environment

Dielectric Strength	4 kV AC for input/output 4 kV AC for input or output to case
Pollution Degree	2
Standards	CSA C22.2 No 14 IEC 60950-1 UL 508
Product Certifications	EAC UL CSA
Marking	CSA UL CE EAC
Ip Degree Of Protection	IP20
Ambient Air Temperature For Operation	-40…176 °F (-40…80 °C)
Ambient Air Temperature For Storage	-40…257 °F (-40…125 °C)

Ordering and shipping details

Category	US10CP222375
Discount Schedule	0CP2
Gtin	3606485441573
Returnability	No
Country Of Origin	MX

Packing Units

Unit Type Of Package 1	PCE
Number Of Units In Package 1	1
Package 1 Height	1.26 in (3.2 cm)
Package 1 Width	4.33 in (11.0 cm)
Package 1 Length	4.33 in (11.0 cm)
Package 1 Weight	10.34 oz (293.0 g)
Unit Type Of Package 2	S02
Number Of Units In Package 2	24
Package 2 Height	5.91 in (15.0 cm)
Package 2 Width	11.81 in (30.0 cm)
Package 2 Length	15.75 in (40.0 cm)
Package 2 Weight	16.09 lb(US) (7.3 kg)

Sustainability

Green Premium™ label is Schneider Electric's commitment to delivering products with best-in-class environmental performance. Green Premium promises compliance with the latest regulations, transparency on environmental impacts, as well as circular and low-CO_2 products.

Guide to assessing product sustainability is a white paper that clarifies global eco-label standards and how to interpret environmental declarations.

Learn more about Green Premium >

Guide to assess a product's sustainability >

Transparency RoHS/REACh

Well-being performance

Mercury Free

Rohs Exemption Information Yes

Certifications & Standards

Reach Regulation	REACh Declaration
Eu Rohs Directive	Pro-active compliance (Product out of EU RoHS legal scope)
China Rohs Regulation	China RoHS declaration
Environmental Disclosure	Product Environmental Profile
Circularity Profile	End of Life Information
California Proposition 65	WARNING: This product can expose you to chemicals including: Lead and lead compounds, which is known to the State of California to cause cancer and birth defects or other reproductive harm. For more information go to www.P65Warnings.ca.gov

Dimensions Drawings

Dimensions

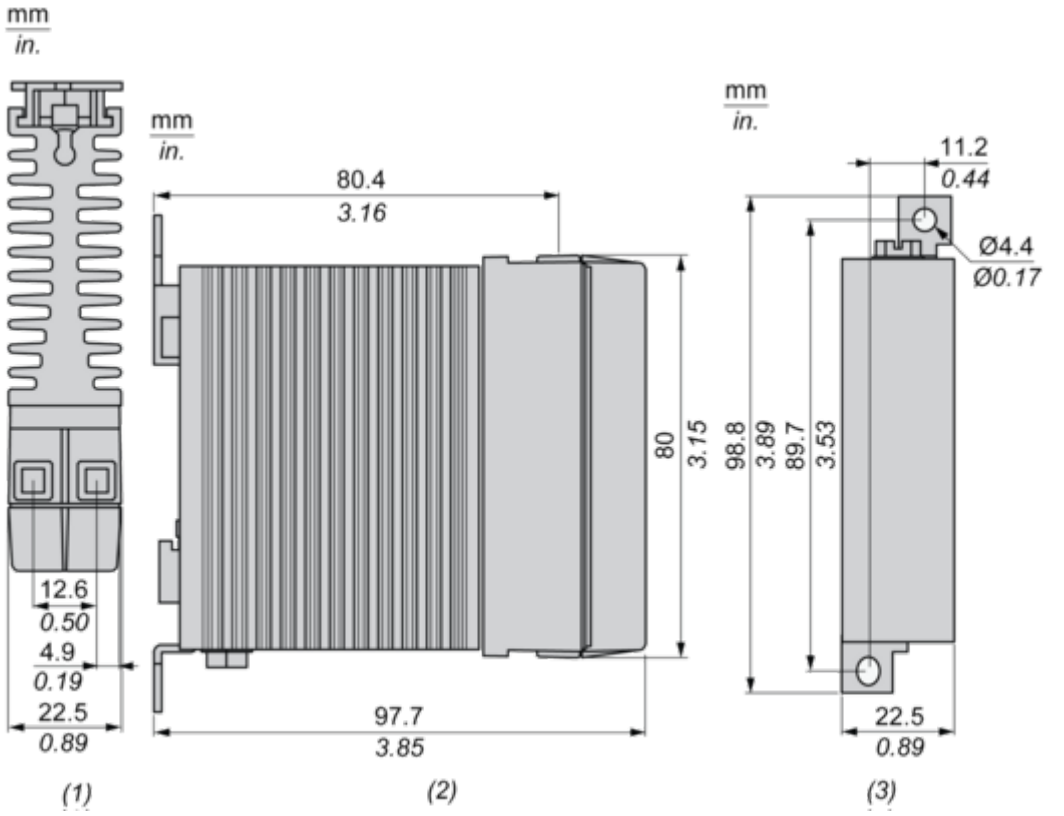

(1) Top view
(2) Side view
(3) Front view

Performance Curves

Derating Curves

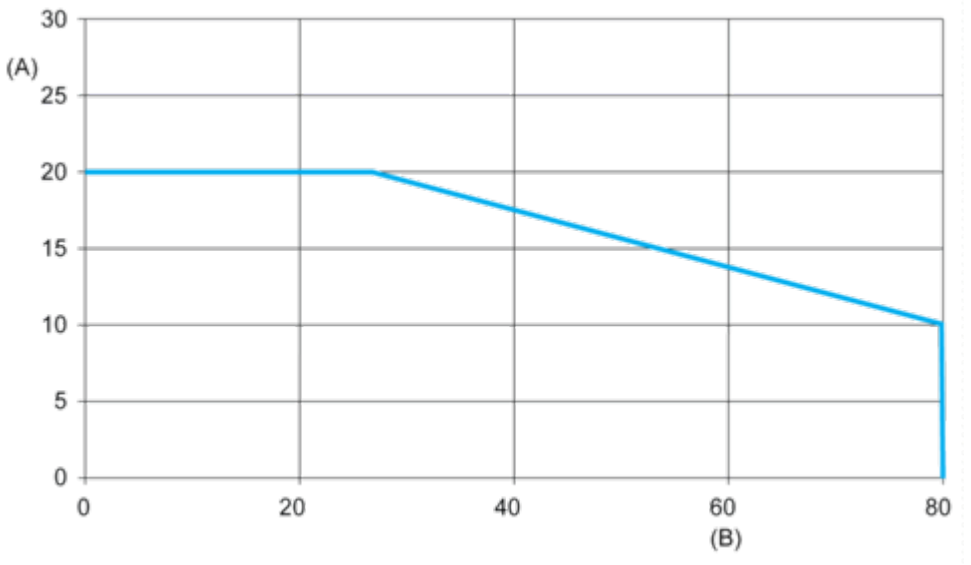

A : Load Current (Amperes)
B : Ambient Temperature (°C)