Product data sheet

Specifications

single phase relay, Harmony Solid State Modular Relays, 25A, DIN rail mount, zero voltage switching, input 90 to 140V AC, output 48 to 600V AC

SSM3A325F7

Product availability: Stock - Normally stocked in distribution facility

Price*: 130.62 USD

Main

Range Of Product	Harmony Solid State Relays
Product Or Component Type	Solid state relay up to 30 A
Device Short Name	SSM3
Number Of Channels	3
Number Of Phases	3 phase
Output Switching Mode	Zero voltage switching

Complementary

Mounting Support	Symmetrical DIN rail
Line Rated Current	25 A
Output Voltage	48...600 V AC
[Uc] Control Circuit Voltage	90...140 V AC
Tightening Torque	0.6...0.7 N.m for input 1.36...1.7 N.m for output
Connections - Terminals	Screw terminals 0.2...1.3 mm², AWG 24...AWG 16) input Screw terminals 1.3...5.3 mm², AWG 16...AWG 10) output
Maximum Capacitance	8 pF for input/output
Insulation Resistance	1000 MOhm
Local Signalling	for input status LED (green)
Switching Voltage	90 V turn-on 10 V turn-off
Input Current	15…19 mA
Solid State Output Type	Zero voltage switching
Load Current	0.1…25 A
Transient Overvoltage	1100 V
Surge Current	286 A 20 ms 50 Hz 300 A 16.6 ms 60 Hz
Maximum Voltage Drop	<1.35 V on-state
Maximum Horse Power Rating	1 hp 104 °F (40 °C) 240 V AC 2 hp 104 °F (40 °C) 380 V AC 3 hp 104 °F (40 °C) 480 V AC

Price is “List Price” and may be subject to a trade discount – check with your local distributor or retailer for actual price.

Disclaimer: This documentation is not intended as a substitute for and is not to be used for determining suitability or reliability of these products for specific user applications

Maximum I²T For Fusing	410 A².s for 10 ms at 50 Hz 374 A².s for 8.3 ms at 60 Hz
Maximum Leakage Current	0.25 mA off-state
Dv/Dt	500 V/µs off-state at maximum voltage
Response Time	30 ms (turn-off) 20 ms (turn-on)
Power Factor	0.5 (with maximum load)
Overvoltage Category	III
Net Weight	1.63 lb(US) (0.74 kg)

Environment

Dielectric Strength	4 kV AC for input/output 4 kV AC for input or output to case
Pollution Degree	2
Standards	IEC 60950-1 UL 508 CSA C22.2 No 14
Product Certifications	UL EAC CSA
Marking	CSA UL CE EAC
Ip Degree Of Protection	IP20
Ambient Air Temperature For Operation	-4…176 °F (-20…80 °C)
Ambient Air Temperature For Storage	-40…212 °F (-40…100 °C)

Ordering and shipping details

Category	US10CP222375
Discount Schedule	0CP2
Gtin	3606485441696
Returnability	Yes
Country Of Origin	MX

Packing Units

Unit Type Of Package 1	PCE
Number Of Units In Package 1	1
Package 1 Height	5.51 in (14.0 cm)
Package 1 Width	4.33 in (11.0 cm)
Package 1 Length	4.33 in (11.0 cm)
Package 1 Weight	28.64 oz (812.0 g)
Unit Type Of Package 2	S02
Number Of Units In Package 2	5
Package 2 Height	5.91 in (15.0 cm)
Package 2 Width	11.81 in (30.0 cm)

Package 2 Length	15.75 in (40.0 cm)
Package 2 Weight	9.85 lb(US) (4.47 kg)

Sustainability

Green Premium™ label is Schneider Electric's commitment to delivering products with best-in-class environmental performance. Green Premium promises compliance with the latest regulations, transparency on environmental impacts, as well as circular and low-CO_2 products.

Guide to assessing product sustainability is a white paper that clarifies global eco-label standards and how to interpret environmental declarations.

Learn more about Green Premium >

Guide to assess a product's sustainability >

Transparency RoHS/REACh

Well-being performance

Mercury Free

Rohs Exemption Information Yes

Certifications & Standards

Reach Regulation	REACh Declaration
Eu Rohs Directive	Pro-active compliance (Product out of EU RoHS legal scope)
China Rohs Regulation	China RoHS declaration
Environmental Disclosure	Product Environmental Profile
Circularity Profile	End of Life Information
California Proposition 65	WARNING: This product can expose you to chemicals including: Lead and lead compounds, which is known to the State of California to cause cancer and birth defects or other reproductive harm. For more information go to www.P65Warnings.ca.gov

Dimensions Drawings

Dimensions

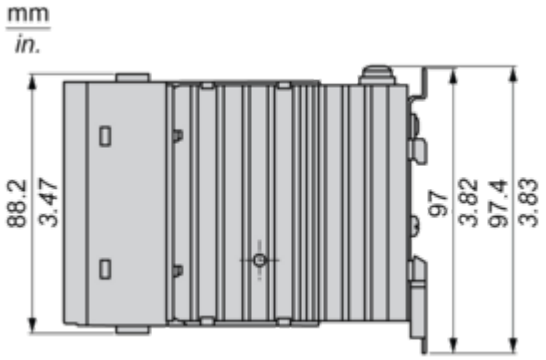

(1)

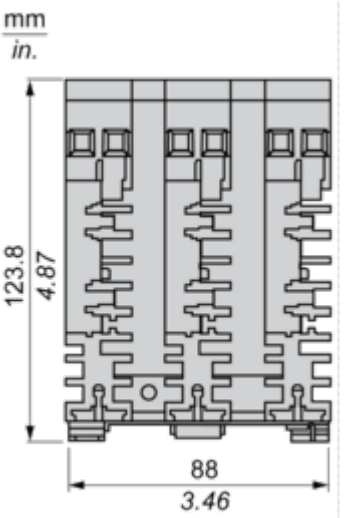

(2)

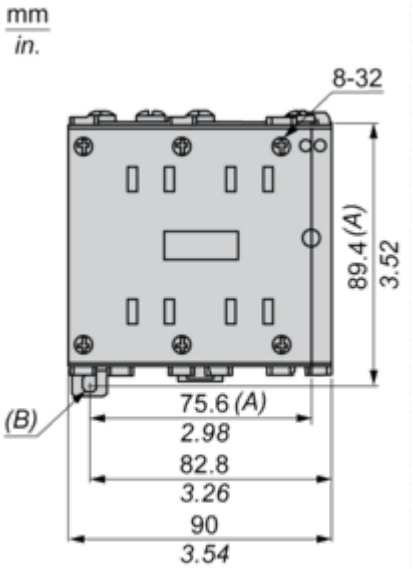

(3)

(1) Side view
(2) Top view
(3) Front view
(A) Mounting hole
(B) Mounting hole / slot

Performance Curves

Derating Curves

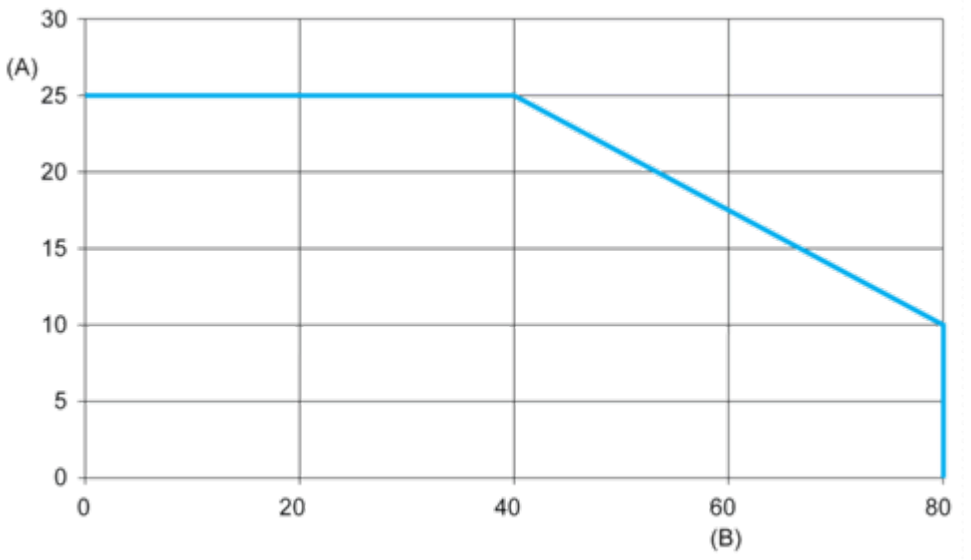

A : Output Current (Arms)
B : Ambient Temperature (°C)