Product data sheet

Specifications

Green Premium™

Solid state relay, Harmony, 125A, DIN rail mount, zero voltage switching, input 4â€¦32V DC, output 48â€¦660V AC

SSP1A4125BD

Discontinued

Discontinued on: Jun 30, 2023

Product availability: Non-Stock - Not normally stocked in distribution facility

Main

Range Of Product	Harmony Solid State Relays
Product Or Component Type	Solid state relay up to 125 A
Device Short Name	SSP1
Mounting Support	Panel
Number Of Phases	1 phase
Line Rated Current	125 A
Solid State Output Type	Zero voltage switching SCR output
Output Switching Mode	Zero voltage switching

Complementary

Minimum Switching Voltage	4 V DC turn-on
Maximum Switching Voltage	1 V DC turn-off
Response Time	0.5 cycle (turn-on) 0.5 cycle (turn-off)
Input Current	7…12 mA
Load Current	0.15…125 A
Transient Overvoltage	1200 V
Surge Current	1750 A 16.6 ms
Maximum I^2T For Fusing	12709 A^2.s for 8.33 ms at 60 Hz 13950 A^2.s for 10 ms at 50 Hz
Co-Ordination Type	Type 1 - 80 A miniature circuit breaker (MCB) B Type 2 - 63 A miniature circuit breaker (MCB) B
Maximum Leakage Current	1 mA off-state
Maximum Voltage Drop	<1.15 V on-state
Dv/Dt	500 V/µs off-state at maximum voltage
Power Factor	0.5 (with maximum load)
Motor Controller Rating	2 hp 120 V AC 5 hp 240 V AC 10 hp 480 V AC
Insulation Resistance	1000 MOhm at 500 V DC

Price is “List Price” and may be subject to a trade discount – check with your local distributor or retailer for actual price.

Disclaimer: This documentation is not intended as a substitute for and is not to be used for determining suitability or reliability of these products for specific user applications

Maximum Capacitance	8 pF for input/output
Dielectric Strength	4 kV AC for input/output 4 kV AC for input or output to case
[Uimp] Rated Impulse Withstand Voltage	6 kV output to case 6 kV input to output
Tightening Torque	1.5...1.7 N.m for input 2...2.2 N.m for output
Connections - Terminals	Screw terminals 0.2...3.3 mm², AWG 24...AWG 12) with cable end input Screw terminals 0.5...5.26 mm², AWG 20...AWG 10) with cable end output Screw terminals 0.2...3.3 mm², AWG 24...AWG 12) without cable end input Screw terminals 0.5...8.26 mm², AWG 20...AWG 8) without cable end output Forked type tag connectors 9.2 x 4 mm input Ring lugs 9.2 x 4 mm input Forked type tag connectors 11.7 x 4.5 mm output Ring lugs 11.7 x 4.5 mm output
Thermal Resistance	0.22 °C/W junction to case
Led Indicator	LED, green input
Ip Degree Of Protection	IP20
Safety Reliability Data	MTTFd = 1875.9 years B10d = 1731395
Net Weight	3.15 oz (89.2 g)
Device Presentation	Complete product

Environment

Ambient Air Temperature For Operation	-40…176 °F (-40…80 °C)
Ambient Air Temperature For Storage	-40…257 °F (-40…125 °C)
Pollution Degree	2
Overvoltage Category	III
Product Certifications	UL CSA CE EAC
Marking	EAC UL CE CSA
Standards	EN/IEC 62314 UL 508 EN/IEC 60950-1 CSA C22.2 No 14-13

Ordering and shipping details

Category	US10CP222375
Discount Schedule	0CP2
Gtin	3606485441917
Returnability	Yes
Country Of Origin	US

Packing Units

Unit Type Of Package 1	PCE
Number Of Units In Package 1	1

Package 1 Height	1.50 in (3.8 cm)
Package 1 Width	1.89 in (4.8 cm)
Package 1 Length	2.64 in (6.7 cm)
Package 1 Weight	3.56 oz (101.0 g)
Unit Type Of Package 2	S01
Number Of Units In Package 2	30
Package 2 Height	5.91 in (15.0 cm)
Package 2 Width	5.91 in (15.0 cm)
Package 2 Length	15.75 in (40.0 cm)
Package 2 Weight	7.34 lb(US) (3.331 kg)

Sustainability

Green Premium™ label is Schneider Electric's commitment to delivering products with best-in-class environmental performance. Green Premium promises compliance with the latest regulations, transparency on environmental impacts, as well as circular and low-CO_2 products.

Guide to assessing product sustainability is a white paper that clarifies global eco-label standards and how to interpret environmental declarations.

Learn more about Green Premium >

Guide to assess a product's sustainability >

Transparency RoHS/REACh

Well-being performance

Mercury Free

Rohs Exemption Information Yes

Certifications & Standards

Reach Regulation	REACh Declaration
Eu Rohs Directive	Pro-active compliance (Product out of EU RoHS legal scope)
China Rohs Regulation	China RoHS declaration
Environmental Disclosure	Product Environmental Profile
Circularity Profile	End of Life Information
California Proposition 65	WARNING: This product can expose you to chemicals including: Lead and lead compounds, which is known to the State of California to cause cancer and birth defects or other reproductive harm. For more information go to www.P65Warnings.ca.gov

Dimensions Drawings

Dimensions

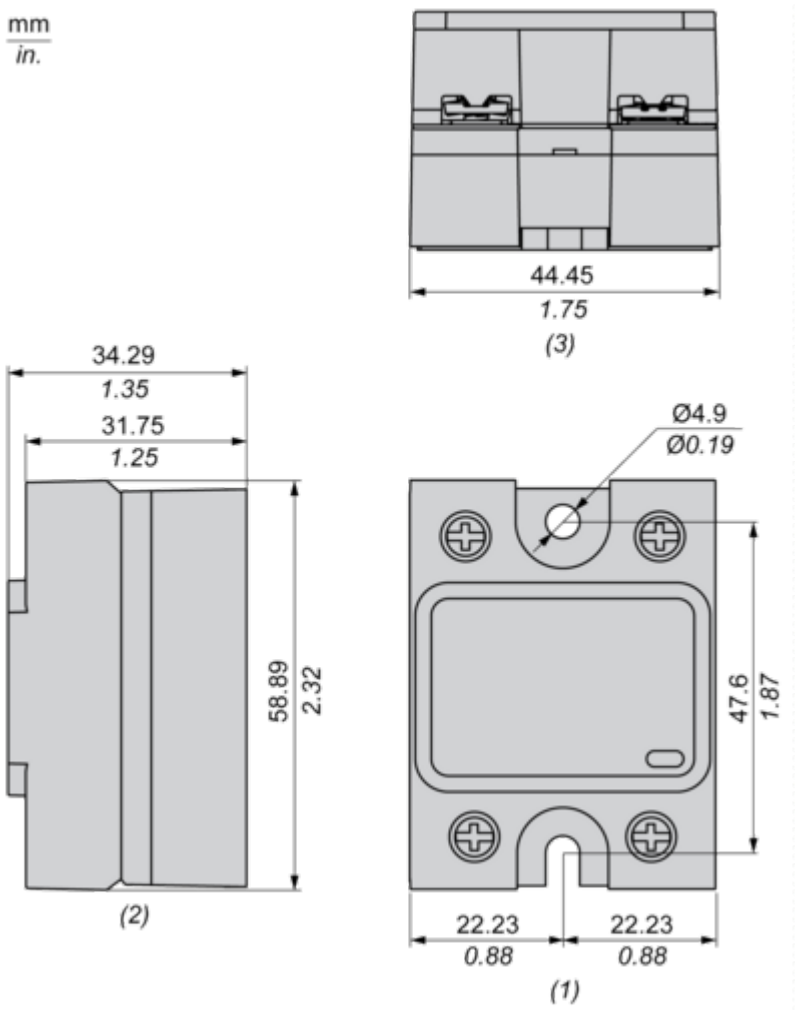

(1) Front view
(2) Side view
(3) Bottom view

Performance Curves

Derating Curves

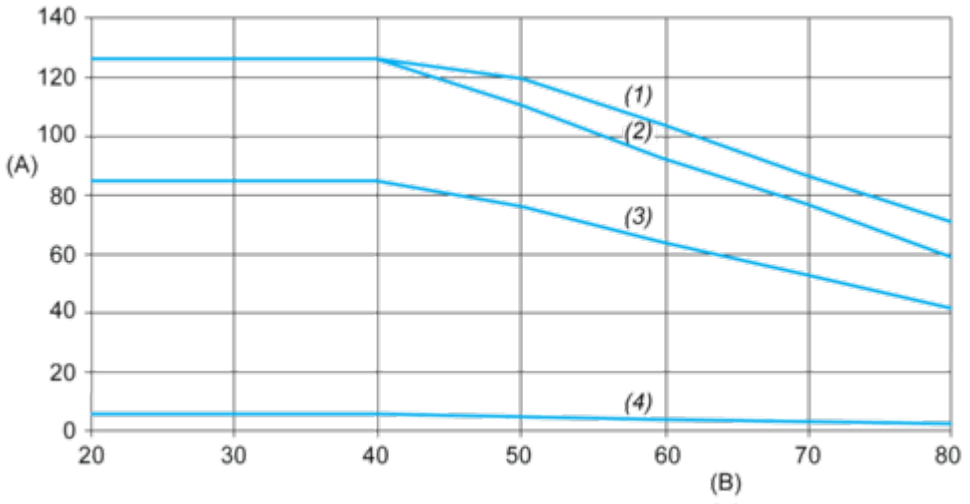

A : Load Current (Arms)
B : Ambient Temperature (°C)
(1) For Heatsink SSRHP02
(2) For Heatsink SSRHP05
(3) For Heatsink SSRHP07
(4) No Heatsink