# Product data sheet

Specifications

## IO module, Modicon M171, optimized, blind 14 IO, Modbus, 100-240V AC

TM171OBM14R

**Product availability: Non-Stock - Not normally stocked in distribution facility**

**Price*: 237.18 USD**

## Main

| | |
|---|---|
| **Range Of Product** | Modicon M171/M172 |
| **Product Or Component Type** | Controller |
| **Product Specific Application** | HVAC and pumping solution |
| **Variant** | Programmable |
| **Total Inputs/Outputs** | 14 |
| **Discrete Input Number** | 2 |
| **Discrete Output Number** | 1 relay outputs SPDT with independent common<br>3 relay outputs SPST with same common |
| **Discrete Output Current** | 2 A relay |
| **Analogue Input Number** | 2 configurable<br>3 analog input NTC |
| **Analogue Output Number** | 2 voltage 0...10 V<br>2 PWM/PPM 20 kHz, 12 V, 35 mA<br>1 current 0...20 mA/4...20 mA |

## Complementary

| | |
|---|---|
| **Number Of Port** | 1 LAN expansion bus<br>1 RS485 - screw terminal block Modbus serial link) |
| **Input/Output Number** | 5 analog output<br>4 digital output<br>5 analog input |
| **Discrete Input Logic** | Sink or source (positive/negative) |
| **Contacts Usage** | Volt-free contacts |
| **Analogue Input Type** | NTC temperature probe - 50...100 °C 0.1 °C<br>Pt 1000 temperature probe - 50...400 °C 0.1 °C<br>current 0...20 mA/4...20 mA<br>voltage 0...1 V<br>voltage 0...10 V ratiometric)<br>voltage 0...5 V |
| **Sensor Power Supply** | 12 V DC 85 mA |
| **[Us] Rated Supply Voltage** | 100...240 V |
| **Width** | 2.76 in (70.2 mm) |
| **Height** | 3.43 in (87 mm) |
| **Depth** | 2.43 in (61.6 mm) |
| **Net Weight** | 0.42 lb(US) (0.19 kg) |

Price is “List Price” and may be subject to a trade discount – check with your local distributor or retailer for actual price.

Disclaimer: This documentation is not intended as a substitute for and is not to be used for determining suitability or reliability of these products for specific user applications

## Ordering and shipping details

| | |
|---|---|
| **Category** | US1PC1222537 |
| **Discount Schedule** | PC12 |
| **Gtin** | 3606480752735 |
| **Returnability** | No |
| **Country Of Origin** | IT |

## Packing Units

| | |
|---|---|
| **Unit Type Of Package 1** | PCE |
| **Number Of Units In Package 1** | 1 |
| **Package 1 Height** | 5.20 in (13.200 cm) |
| **Package 1 Width** | 3.54 in (9.000 cm) |
| **Package 1 Length** | 7.28 in (18.500 cm) |
| **Package 1 Weight** | 9.88 oz (280.000 g) |
| **Unit Type Of Package 2** | S02 |
| **Number Of Units In Package 2** | 6 |
| **Package 2 Height** | 5.91 in (15.000 cm) |
| **Package 2 Width** | 11.81 in (30.000 cm) |
| **Package 2 Length** | 15.75 in (40.000 cm) |
| **Package 2 Weight** | 4.28 lb(US) (1.940 kg) |

## Sustainability

**Green Premium™ label** is Schneider Electric's commitment to delivering products with best-in-class environmental performance. Green Premium promises compliance with the latest regulations, transparency on environmental impacts, as well as circular and low-$CO_2$ products.

**Guide to assessing product sustainability** is a white paper that clarifies global eco-label standards and how to interpret environmental declarations.

Learn more about Green Premium >

Guide to assess a product's sustainability >

Transparency RoHS/REACh

## Resource performance

Upgradeable Through Digital Modules And Upgraded Components

## Well-being performance

Mercury Free

Rohs Exemption Information Yes

## Certifications & Standards

| | |
|---|---|
| **Reach Regulation** | REACh Declaration |
| **Eu Rohs Directive** | Pro-active compliance (Product out of EU RoHS legal scope) |
| **China Rohs Regulation** | China RoHS declaration |
| **Environmental Disclosure** | Product Environmental Profile |
| **Weee** | The product must be disposed on European Union markets following specific waste collection and never end up in rubbish bins. |
| **Circularity Profile** | End of Life Information |
| **California Proposition 65** | WARNING: This product can expose you to chemicals including: Lead and lead compounds, which is known to the State of California to cause cancer and birth defects or other reproductive harm. For more information go to www.P65Warnings.ca.gov |

Dimensions Drawings

## Dimensions

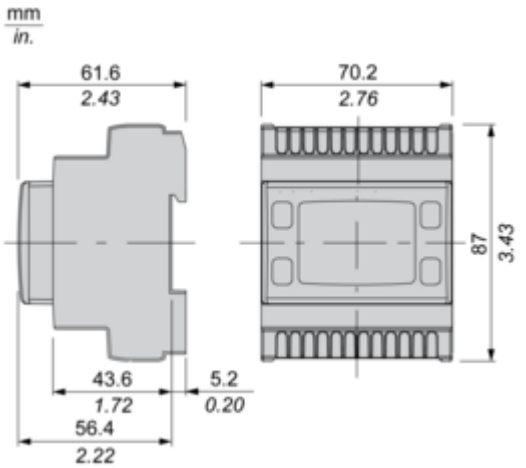

Mounting and Clearance

## Mounting and Clearance

### Clearance

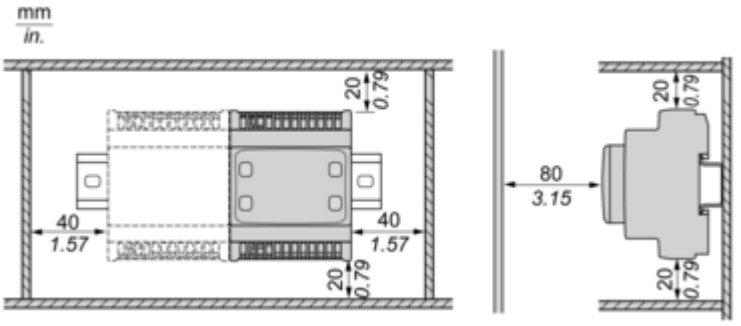


### Misplacement

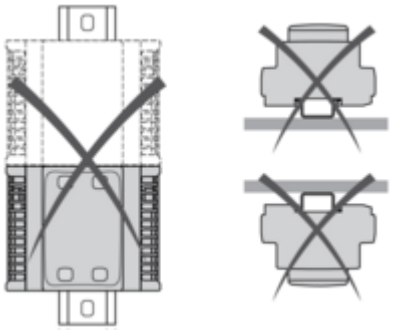

## Connections and Schema

### Power Supply

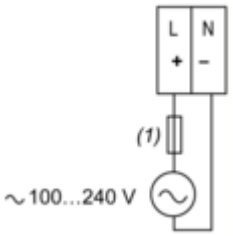


**(1)** Type T fuse 160 mA

## Wiring Diagram

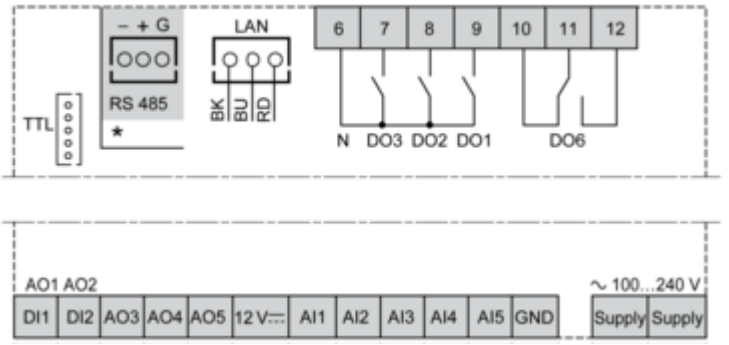


**N :** Neutral
**GND :** Ground
**BK :** Black
**BU :** Blue
**RD :** Red
**AI :** Analogue input
**AO :** Analogue output
**DI :** Digital input
**DO :** Digital output