Product data sheet

Specifications

Green Premium™

Counter module, Modicon M238 logic controller, 4 O discrete, 60 kHz, 2 screw terminal blocks

TM200HSC206DT

Discontinued - Service only

Discontinued on: Dec 2, 2020

End-of-service on: Dec 31, 2020

Product availability: Non-Stock - Not normally stocked in distribution facility

Main

Range Of Product	Modicon M238 logic controller
Product Or Component Type	Counter module
Electrical Connection	2 screw terminal blocks

Complementary

Number Of Modules	3 counter modules per TM238 base
Discrete Input Number	12 EN/IEC 61131-2 type 1
Discrete Output Number	4
Application Specific I/O	Upcounting Frequency meter Downcounting Axis following Frequency generator Period measurement
Counting Mode	8 mode configurable
Counter Inputs Resolution	31 bits + sign
Counting Frequency	60 kHz
Cycle Time	1 ms
Input Compatibility	Incremental signal encoder with 15...30 V source outputs 2 and 3-wire sensors (24 V)
Type Of Cable	Shielded cable
Isolation Between Channels And Internal Logic	1500 V for 1 minute
Discrete Input Type	Auxiliary input IN_CAP Auxiliary input IN_EN Auxiliary input IN_REF High-speed IN_A High-speed IN_B High-speed IN_SYNC
Discrete Input Logic	Positive logic (sink)
Discrete Input Voltage	24 V DC
Voltage State 1 Guaranteed	15...30 V
Current State 1 Guaranteed	5 mA
Voltage State 0 Guaranteed	<= 5 V
Current State 0 Guaranteed	<= 0.5 mA

Price is “List Price” and may be subject to a trade discount – check with your local distributor or retailer for actual price.

Disclaimer: This documentation is not intended as a substitute for and is not to be used for determining suitability or reliability of these products for specific user applications

Discrete Input Current	2 mA 11 V
Discrete Output Logic	Positive logic (source)
Discrete Output Voltage	24 V DC 19.2...30 V
Discrete Output Current	0.5 A
Load Current	2 A per module 0.5 A per output
Response Time On Output	<= 200 µs energisation/de-energisation
Maximum Leakage Current	0.1 mA at state 0
Maximum Voltage Drop	<3 V at state 1
Short-Circuit Protection	Automatic reset after disappearance of fault
Output Overload Protection	0.5...1.5 A trip current with automatic reset after fault disappearance, per o/p
Fallback Status	Each channel held at its last value or set to the predefined value (0 or 1) Faulty channel set to 0
Load Inductance	L = 0.5/I²F
Load Capacitance	50 µF
Local Signalling	1 display block
Current Consumption	<= 100 mA 24 V DC internal supply <= 100 mA 5 V DC internal supply <= 2 A 24 V DC external power supply
Mounting Support	35 mm symmetrical DIN rail

Ordering and shipping details

Category	US1PC1222531
Discount Schedule	PC12
Gtin	3606480060533
Returnability	No
Country Of Origin	ID

Packing Units

Unit Type Of Package 1	PCE
Number Of Units In Package 1	1
Package 1 Height	3.15 in (8.0 cm)
Package 1 Width	4.13 in (10.5 cm)
Package 1 Length	4.92 in (12.5 cm)
Package 1 Weight	8.47 oz (240.0 g)

Contractual warranty

Warranty	18 months

Sustainability

Green Premium™ label is Schneider Electric's commitment to delivering products with best-in-class environmental performance. Green Premium promises compliance with the latest regulations, transparency on environmental impacts, as well as circular and low-CO_2 products.

Guide to assessing product sustainability is a white paper that clarifies global eco-label standards and how to interpret environmental declarations.

Learn more about Green Premium >

Guide to assess a product's sustainability >

Transparency RoHS/REACh

Well-being performance

Mercury Free	
Rohs Exemption Information	Yes
Pvc Free	

Certifications & Standards

Reach Regulation	REACh Declaration
Eu Rohs Directive	Pro-active compliance (Product out of EU RoHS legal scope)
China Rohs Regulation	China RoHS declaration
Environmental Disclosure	Product Environmental Profile
Circularity Profile	End of Life Information
California Proposition 65	WARNING: This product can expose you to chemicals including: Lead and lead compounds, which is known to the State of California to cause cancer and birth defects or other reproductive harm. For more information go to www.P65Warnings.ca.gov

Dimensions Drawings

High Speed Counter (HSC) Module

Dimensions

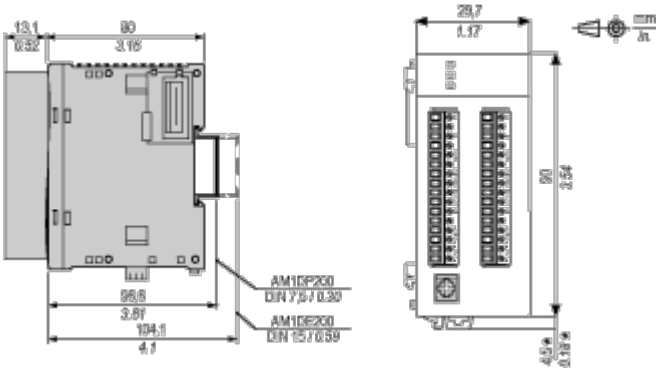

NOTE: * 8.5 mm (0.33 in) when the clip-on lock is pulled out.

Mounting and Clearance

DIN Rail Mounting

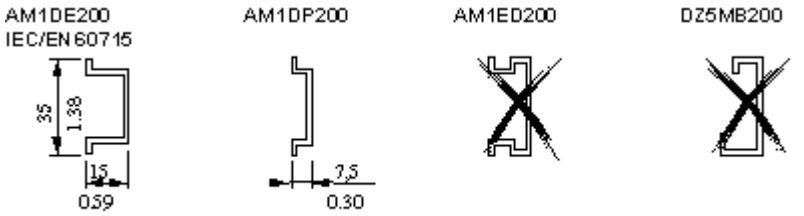

Rail depth	Catalogue part number
15 mm (0.59 in.)	AM1DE200
7,5 mm (0.30 in.)	AM1DP200

NOTE: Do not use AM1ED200 and DZ5MB200

Module Mounting on a Panel Surface

Mounting Hole Layout

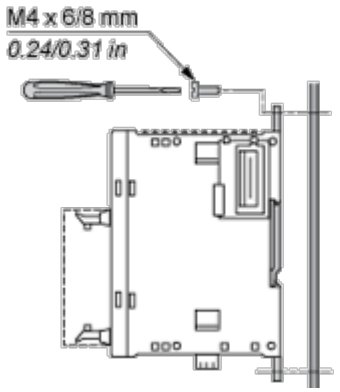

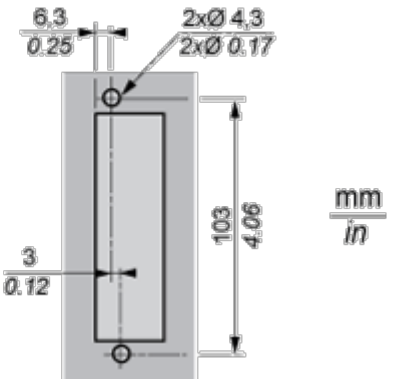

Connections and Schema

Wiring Requirements

Cable Types and Wire Sizes for Removable Screw Terminal Block

9 0.35 mm in.							
mm ^{2}	0,14...1,5	0,25...0,5	0,25...1,5	0,14...0,5	0,14...0,75	0,25...0,34	0,5
AWG	26...16	24...20	24...16	26...20	26...18	24...22	20

Wiring Diagrams Examples

Sensors Connections

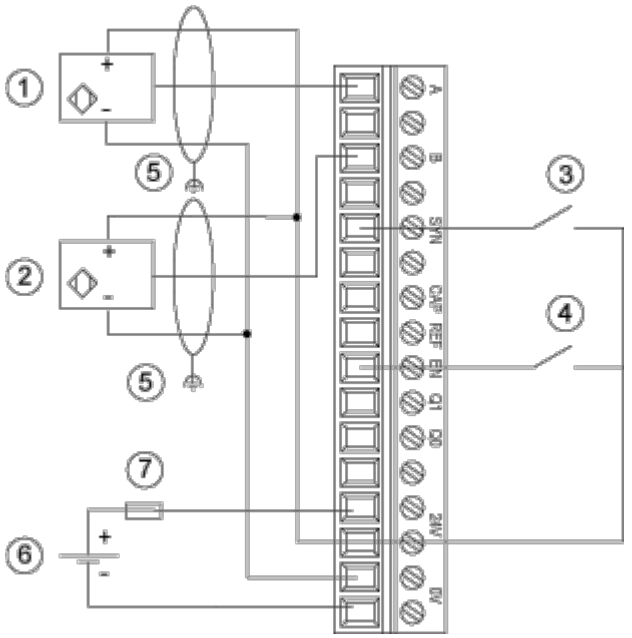

1 IN_A input

2 IN_B input

3 IN_SYNC input (synchronization input)

4 IN_EN input (enable input)

5 Functional ground

6 24 Vdc Power Supply

7 External fuse

Incremental Encoder Connection

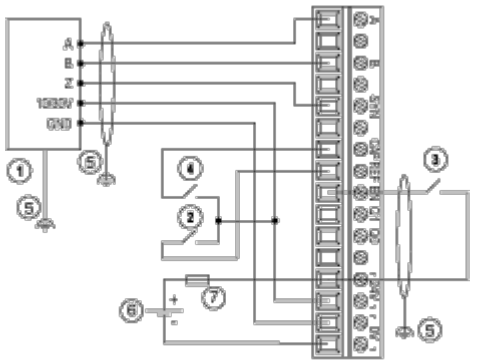

1 Encoder (inputs A, B and Z)

2 IN_REF input (reference input)

3 IN_EN input (enable input)

4 IN_CAP input (capture input)

5 Functional ground

6 24 Vdc Power supply

7 External fuse

Actuators and Power Supply Connections

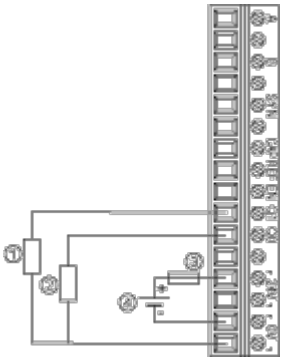

1 Actuator for the Q1 output

2 Actuator for the Q0 output

3 External fuse

4 24 Vdc Power Supply for sensors and actuators