Product data sheet

Specifications

logic controller, Modicon M241, 40 IO, transistor, PNP

TM241C40T

Product availability: Non-Stock - Not normally stocked in distribution facility

Price*: 519.00 USD

Main

Range Of Product	Modicon M241
Product Or Component Type	Logic controller
[Us] Rated Supply Voltage	24 V DC
Discrete Input Number	24, discrete input 8 fast input IEC 61131-2 Type 1
Discrete Output Type	Transistor
Discrete Output Number	16 transistor 4 fast output
Discrete Output Voltage	24 V DC transistor output
Discrete Output Current	0.1 A fast output (PTO mode) Q0...Q3) 0.5 A transistor output Q0...Q15)

Complementary

Discrete I/O Number	40
Maximum Number Of I/O Expansion Module	7 (local I/O-Architecture) 14 (remote I/O-Architecture)
Supply Voltage Limits	20.4…28.8 V
Inrush Current	50 A
Power Consumption In W	32.6…40.4 W with max number of I/O expansion module)
Discrete Input Logic	Sink or source
Discrete Input Voltage	24 V
Discrete Input Voltage Type	DC
Voltage State 1 Guaranteed	>= 15 V input
Voltage State 0 Guaranteed	<= 5 V input
Discrete Input Current	10.7 mA fast input 7 mA input
Input Impedance	4.7 kOhm input 2.81 kOhm fast input
Response Time	<= 2 µs turn-on, I0...I7 fast input <= 2 µs turn-off, I0...I7 fast input <= 2 µs turn-on, Q0...Q3 fast output <= 2 µs turn-off, Q0...Q3 fast output 50 µs turn-on, I0...I15 input 50 µs turn-off, I0...I15 input <= 34 µs turn-on, Q0...Q15 output <= 250 µs turn-off, Q0...Q15 output

Price is “List Price” and may be subject to a trade discount – check with your local distributor or retailer for actual price.

Disclaimer: This documentation is not intended as a substitute for and is not to be used for determining suitability or reliability of these products for specific user applications

Configurable Filtering Time	1 µs fast input 12 ms fast input 0 ms input 1 ms input 4 ms input 12 ms input
Discrete Output Logic	Positive logic (source)
Output Voltage Limits	30 V DC
Maximum Current Per Output Common	2 A
Maximum Output Frequency	20 kHz fast output (PWM mode) 100 kHz fast output (PLS mode) 1 kHz output
Accuracy	+/- 0.1 % 0.02…0.1 kHz fast output +/- 1 % 0.1…1 kHz fast output
Maximum Leakage Current	5 µA output
Maximum Voltage Drop	<1 V
Maximum Tungsten Load	<2.4 W
Protection Type	Short-circuit protection Short-circuit and overload protection with automatic reset Reverse polarity protection fast output
Reset Time	10 ms automatic reset output 12 s automatic reset fast output
Memory Capacity	64 MB system memory RAM
Data Backed Up	128 MB built-in flash memory backup of user programs
Data Storage Equipment	<= 16 GB SD card optional)
Battery Type	BR2032 lithium non-rechargeable 4 year(s)
Backup Time	2 years 77 °F (25 °C)
Execution Time For 1 Kinstruction	0.3 ms event and periodic task 0.7 ms other instruction
Application Structure	8 event tasks 8 external event tasks 4 cyclic master tasks 3 cyclic master tasks + 1 freewheeling task
Realtime Clock	With
Clock Drift	<= 60 s/month 77 °F (25 °C)
Positioning Functions	PTO 4 100 kHz) PTO 4 transistor output 1 kHz)
Counting Input Number	4 fast input (HSC mode) 200 kHz 16 standard input 1 kHz
Control Signal Type	A/B 100 kHz fast input (HSC mode) Pulse/direction 200 kHz fast input (HSC mode) Single phase 200 kHz fast input (HSC mode)
Integrated Connection Type	Non isolated serial link serial 1 RJ45 RS232/RS485 Non isolated serial link serial 2 removable screw terminal block RS485 USB port mini B USB 2.0
Supply	Serial 1)serial link supply 5 V, <200 mA
Transmission Rate	1.2...115.2 kbit/s (115.2 kbit/s by default) 49.21 ft (15 m) RS485 1.2...115.2 kbit/s (115.2 kbit/s by default) 9.84 ft (3 m) RS232 480 Mbit/s 9.84 ft (3 m) USB
Communication Port Protocol	Non isolated serial link Modbus master/slave

Local Signalling	for PWR 1 LED (green) for RUN 1 LED (green) for module error (ERR) 1 LED (red) for I/O error (I/O) 1 LED (red) for SD card access (SD) 1 LED (green) for BAT 1 LED (red) for SL1 1 LED (green) for SL2 1 LED (green) for bus fault on TM4 (TM4) 1 LED (red) for I/O state 1 LED per channel (green)
Electrical Connection	removable screw terminal block for inputs and outputs pitch 5.08 mm) removable screw terminal block for connecting the 24 V DC power supply pitch 5.08 mm)
Maximum Cable Distance Between Devices	Unshielded cable <164.04 ft (50 m) input Shielded cable <32.81 ft (10 m) fast input Unshielded cable <164.04 ft (50 m) output Shielded cable <9.84 ft (3 m) fast output
Insulation	Between supply and internal logic 500 V AC Non-insulated between supply and ground Between input and internal logic 500 V AC Non-insulated between inputs Between fast input and internal logic 500 V AC Between output and internal logic 500 V AC Non-insulated between outputs Between fast output and internal logic 500 V AC Between output groups 500 V AC
Marking	CE
Surge Withstand	1 kV power lines (DC) common mode IEC 61000-4-5 1 kV shielded cable common mode IEC 61000-4-5 0.5 kV power lines (DC) differential mode IEC 61000-4-5 1 kV relay output differential mode IEC 61000-4-5 1 kV input common mode IEC 61000-4-5 1 kV transistor output common mode IEC 61000-4-5
Mounting Support	Top hat type TH35-15 rail IEC 60715 Top hat type TH35-7.5 rail IEC 60715 plate or panel with fixing kit
Height	3.54 in (90 mm)
Depth	3.74 in (95 mm)
Width	7.48 in (190 mm)
Net Weight	1.37 lb(US) (0.62 kg)

Environment

Standards	ANSI/ISA 12-12-01 CSA C22.2 No 142 CSA C22.2 No 213 IEC 61131-2:2007 Marine specification (LR, ABS, DNV, GL) UL 508
Product Certifications	RCM cULus CE UKCA DNV-GL ABS LR
Resistance To Electrostatic Discharge	8 kV in air IEC 61000-4-2 4 kV on contact IEC 61000-4-2
Resistance To Electromagnetic Fields	9.14 V/m (10 V/m) 80 MHz...1 GHz IEC 61000-4-3 2.74 V/m (3 V/m) 1.4 GHz...2 GHz IEC 61000-4-3 0.91 V/m (1 V/m) 2 GHz...3 GHz IEC 61000-4-3

Resistance To Fast Transients	2 kV IEC 61000-4-4 power lines) 1 kV IEC 61000-4-4 serial link) 1 kV IEC 61000-4-4 input) 1 kV IEC 61000-4-4 transistor output)
Resistance To Conducted Disturbances	10 V 0.15...80 MHz IEC 61000-4-6 3 V 0.1...80 MHz Marine specification (LR, ABS, DNV, GL) 10 V spot frequency (2, 3, 4, 6.2, 8.2, 12.6, 16.5, 18.8, 22, 25 MHz) Marine specification (LR, ABS, DNV, GL)
Electromagnetic Emission	Conducted emissions 120...69 dBµV/m QP power lines)10…150 kHz IEC 55011 Conducted emissions 63 dBµV/m QP power lines)1.5…30 MHz IEC 55011 Radiated emissions 40 dBµV/m QP class A30…230 MHz IEC 55011 Conducted emissions 79...63 dBµV/m QP power lines)150…1500 kHz IEC 55011 Radiated emissions 47 dBµV/m QP class A230…1000 MHz IEC 55011
Immunity To Microbreaks	10 ms
Ambient Air Temperature For Operation	14…122 °F (-10…50 °C) vertical installation) 14…131 °F (-10…55 °C) horizontal installation)
Ambient Air Temperature For Storage	-13…158 °F (-25…70 °C)
Relative Humidity	10…95 %, without condensation in operation) 10…95 %, without condensation in storage)
Ip Degree Of Protection	IP20 with protective cover in place
Pollution Degree	2
Operating Altitude	0...6561.68 ft (0...2000 m)
Storage Altitude	0.00…9842.52 ft (0…3000 m)
Vibration Resistance	3.5 mm 5…8.4 Hz symmetrical rail 3 gn 8.4…150 Hz symmetrical rail 3.5 mm 5…8.4 Hz panel mounting 3 gn 8.4…150 Hz panel mounting
Shock Resistance	15 gn 11 ms

Ordering and shipping details

Category	US10MSX22533
Discount Schedule	0MSX
Gtin	3606480611186
Returnability	No
Country Of Origin	ID

Packing Units

Unit Type Of Package 1	PCE
Number Of Units In Package 1	1
Package 1 Height	4.53 in (11.5 cm)
Package 1 Width	5.16 in (13.094 cm)
Package 1 Length	9.03 in (22.928 cm)
Package 1 Weight	26.81 oz (760.0 g)
Unit Type Of Package 2	S03
Number Of Units In Package 2	6
Package 2 Height	11.81 in (30 cm)
Package 2 Width	11.81 in (30 cm)
Package 2 Length	15.75 in (40 cm)

Package 2 Weight	12.00 lb(US) (5.441 kg)
Unit Type Of Package 3	P06
Number Of Units In Package 3	48
Package 3 Height	29.53 in (75.0 cm)
Package 3 Width	23.62 in (60.0 cm)
Package 3 Length	31.50 in (80.0 cm)
Package 3 Weight	114.64 lb(US) (52 kg)

Sustainability

Green Premium™ label is Schneider Electric's commitment to delivering products with best-in-class environmental performance. Green Premium promises compliance with the latest regulations, transparency on environmental impacts, as well as circular and low-CO_2 products.

Guide to assessing product sustainability is a white paper that clarifies global eco-label standards and how to interpret environmental declarations.

Learn more about Green Premium >

Guide to assess a product's sustainability >

Transparency RoHS/REACh

Well-being performance

Mercury Free	
Rohs Exemption Information	Yes
Pvc Free	

Certifications & Standards

Reach Regulation	REACh Declaration
Eu Rohs Directive	Pro-active compliance (Product out of EU RoHS legal scope)
China Rohs Regulation	China RoHS declaration
Environmental Disclosure	Product Environmental Profile
Weee	The product must be disposed on European Union markets following specific waste collection and never end up in rubbish bins.
Circularity Profile	End of Life Information
California Proposition 65	WARNING: This product can expose you to chemicals including: Lead and lead compounds, which is known to the State of California to cause cancer and birth defects or other reproductive harm. For more information go to www.P65Warnings.ca.gov

Dimensions Drawings

Dimensions

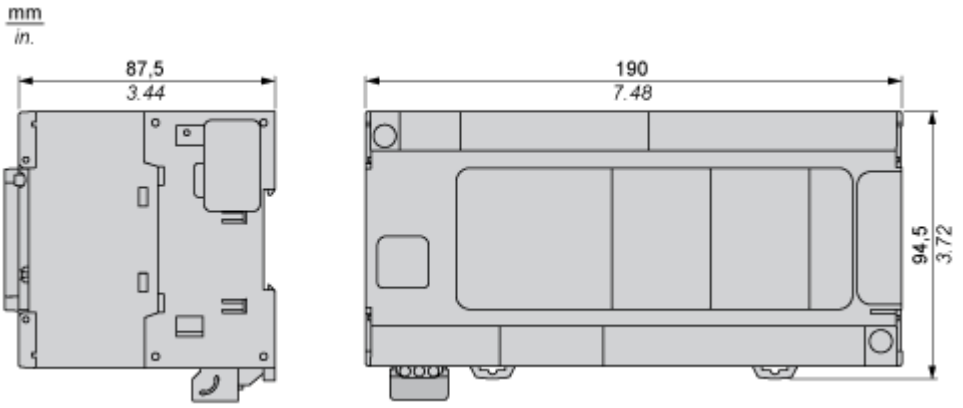

Mounting and Clearance

Clearance

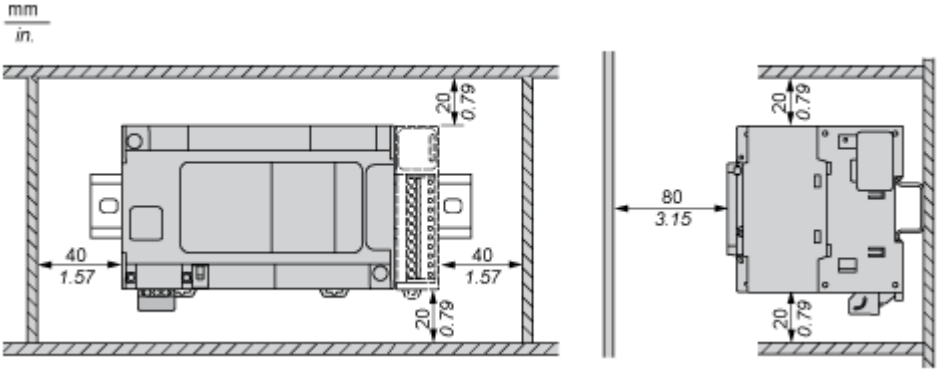

Mounting Position

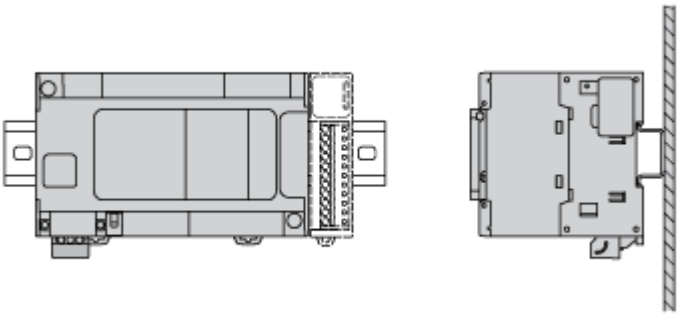

Acceptable Mounting

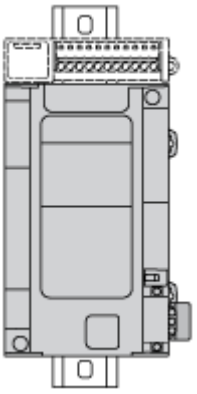

NOTE: Expansion modules must be mounted above the logic controller.

Incorrect Mounting

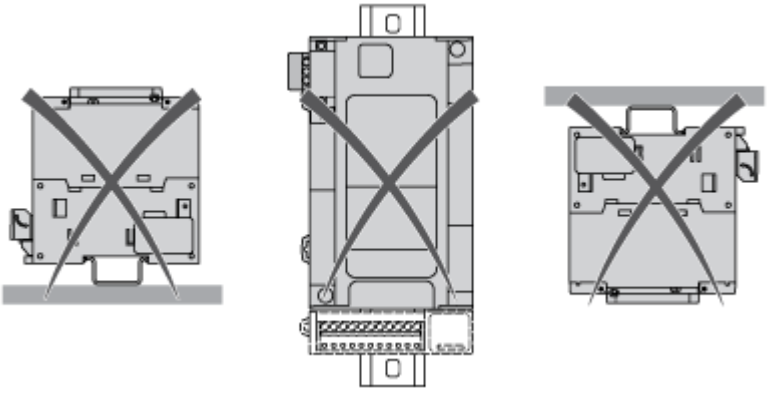

Direct Mounting On a Panel Surface

Mounting Hole Layout

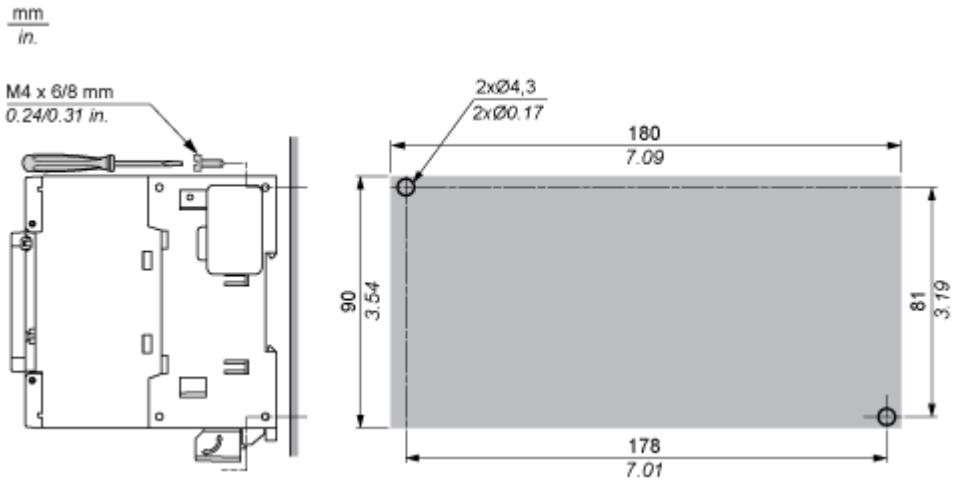

Connections and Schema

Digital Inputs

Wiring Diagram

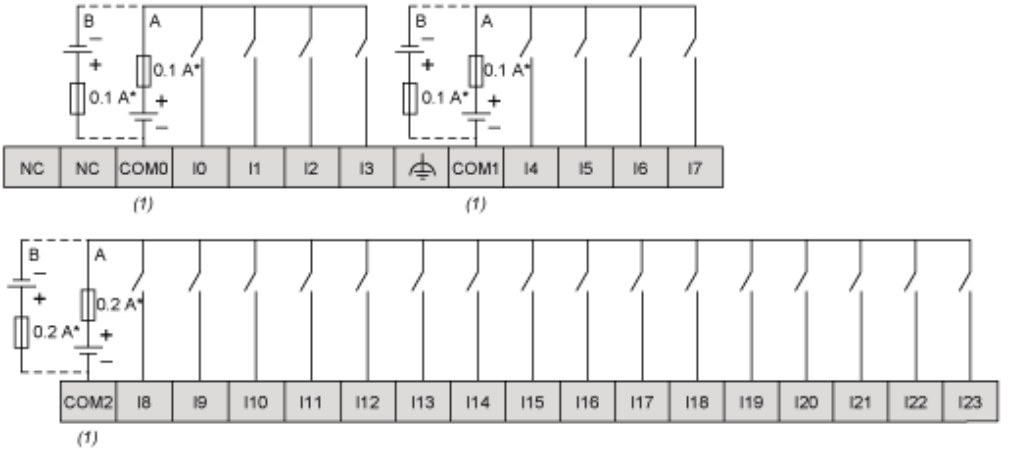

(*) : Type T fuse

(1) : The COM0, COM1 and COM2 terminals are not connected internally

(A) : Sink wiring (positive logic)

(B) : Source wiring (negative logic)

Fast Input Wiring (I0...I7)

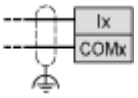

Fast Transistor Outputs

Wiring Diagram

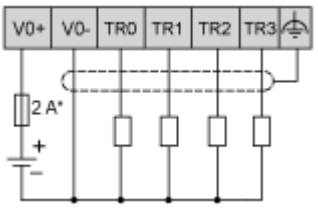

(*) : 2 A fast-blow fuse

Transistor Outputs

Wiring Diagram

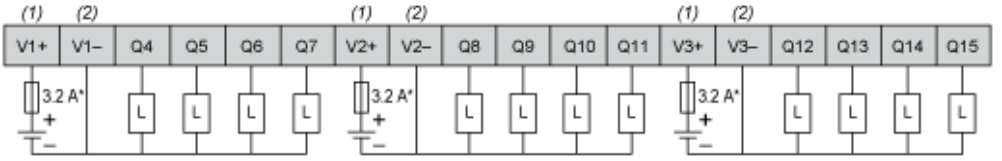

(*) : Type T fuse

(1) : The V1+, V2+ and V3+ terminals are not connected internally.

(2) : The V1–, V2– and V3– terminals are not connected internally.
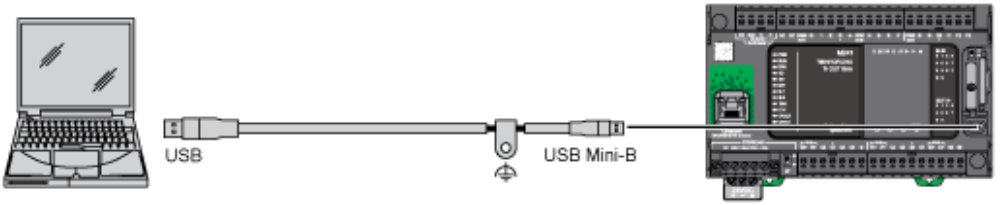
USB Mini-B Connection