Product data sheet

Specifications

Green Premium™

Analog input module, Modicon M238 logic controller, 2 inputs thermocouple low level, differential

TM2AMI2LT

Discontinued on: Dec 1, 2020

To be end-of-service on: Jun 30, 2024

Discontinued - Service only

Main

Range Of Product	Modicon M238 logic controller
Product Or Component Type	Analog input module
Analogue Input Number	2
Input Level	Low level
Analogue Input Type	thermocouple - 200...760 °C thermocouple J differential thermocouple - 270...1370 °C thermocouple K differential thermocouple - 270...400 °C thermocouple T differential
Cross Talk	<= 2 LSB

Complementary

Range Compatibility	Twido Advantys OTB
Analogue Input Resolution	12 bits
Lsb Value	0.1 °C thermocouple thermocouple T 0.3 °C thermocouple thermocouple J 0.325 °C thermocouple thermocouple K
Permissible Continuous Overload	+/- 7.5 V thermocouple
Input Impedance	>= 1 MOhm thermocouple
Sampling Duration	200 ms
Acquisition Period	200 ms per channel + 1 controller cycle time
Measurement Error	0.2 % +/- 5 °C of full scale 25 °C
Temperature Coefficient	+/-0.006 %FS/°C
Repeat Accuracy	+/-0.5 %FS
Non-Linearity	+/- 0.2 %FS
Total Error	+/-1 %FS
Type Of Cable	Shielded cable
Insulation Between Channel And Internal Logic	Photocoupler
Supply	External supply
[Us] Rated Supply Voltage	24 V DC
Supply Voltage Limits	20.4…28.8 V
Electrical Connection	1 removable screw terminal block

Price is “List Price” and may be subject to a trade discount – check with your local distributor or retailer for actual price.

Disclaimer: This documentation is not intended as a substitute for and is not to be used for determining suitability or reliability of these products for specific user applications

Current Consumption	30 mA 24 V DC external 60 mA 5 V DC internal
Net Weight	0.19 lb(US) (0.085 kg)

Environment

Dielectric Strength	500 V between the I/O and the external supply circuit 2500 V between the I/O and internal logic
Width	0.93 in (23.5 mm)
Depth	2.76 in (70 mm)
Height	3.54 in (90 mm)

Ordering and shipping details

Category	22531-PLCS, TWIDO, TWD
Discount Schedule	PC12
Gtin	3595863996388
Returnability	No
Country Of Origin	FR

Packing Units

Unit Type Of Package 1	PCE
Number Of Units In Package 1	1
Package 1 Height	2.95 in (7.5 cm)
Package 1 Width	4.13 in (10.5 cm)
Package 1 Length	4.88 in (12.4 cm)
Package 1 Weight	5.43 oz (154.0 g)

Contractual warranty

Warranty	18 months

Sustainability

Green Premium™ label is Schneider Electric's commitment to delivering products with best-in-class environmental performance. Green Premium promises compliance with the latest regulations, transparency on environmental impacts, as well as circular and low-CO_2 products.

Guide to assessing product sustainability is a white paper that clarifies global eco-label standards and how to interpret environmental declarations.

Learn more about Green Premium >

Guide to assess a product's sustainability >

Transparency RoHS/REACh

Well-being performance

Mercury Free	
Rohs Exemption Information	Yes
Pvc Free	

Certifications & Standards

Reach Regulation	REACh Declaration
Eu Rohs Directive	Pro-active compliance (Product out of EU RoHS legal scope)
China Rohs Regulation	China RoHS declaration
Environmental Disclosure	Product Environmental Profile
Weee	The product must be disposed on European Union markets following specific waste collection and never end up in rubbish bins.
Circularity Profile	End of Life Information
California Proposition 65	WARNING: This product can expose you to chemicals including: Lead and lead compounds, which is known to the State of California to cause cancer and birth defects or other reproductive harm. For more information go to www.P65Warnings.ca.gov

Dimensions Drawings

Analog Input Module (2-channel, Thermocouple)

Dimensions

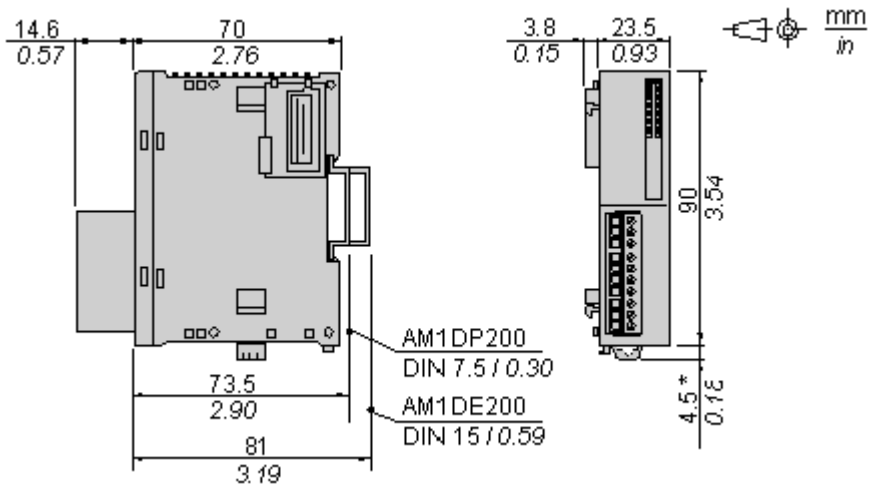

NOTE: * 8.5 mm (0.33 in) when the clip-on lock is pulled out.

Mounting and Clearance

DIN Rail Mounting

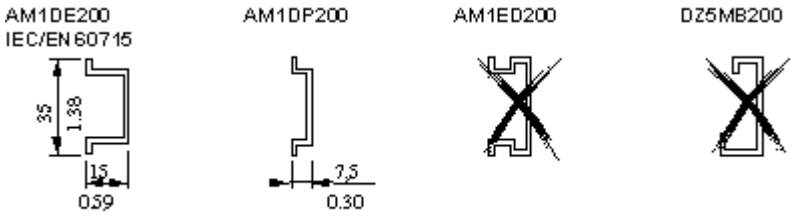

Rail depth	Catalogue part number
15 mm (0.59 in.)	AM1DE200
7,5 mm (0.30 in.)	AM1DP200

NOTE: Do not use AM1ED200 and DZ5MB200

Module Mounting on a Panel Surface

Mounting Hole Layout

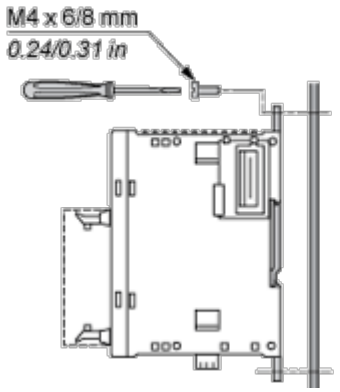

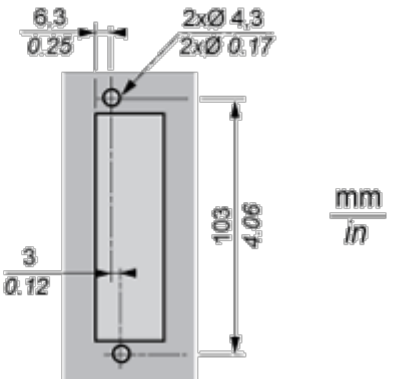

Connections and Schema

Wiring Requirements

Cable Types and Wire Sizes for Removable Screw Terminal Block

9 0.35 mm in.							
mm ^{2}	0,14...1,5	0,25...0,5	0,25...1,5	0,14...0,5	0,14...0,75	0,25...0,34	0,5
AWG	26...16	24...20	24...16	26...20	26...18	24...22	20

Analog Input Module (2-channel, Thermocouple)

Wiring Diagram

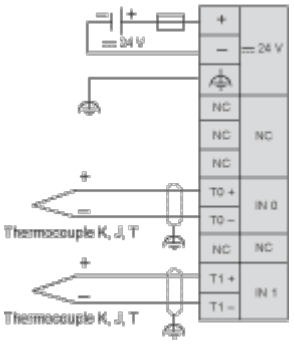

(1) Thermocouple K, J, T