Product data sheet

Specifications

analog input module, Modicon TM3, 2 inputs high resolution, screw, 24V DC

TM3AI2H

Product availability: Stock - Normally stocked in distribution facility

Price*: 197.00 USD

Main

Range Of Product	Modicon TM3
Product Or Component Type	Analog input module
Range Compatibility	Modicon M221 Modicon M241 Modicon M251 Modicon M262
Analogue Input Number	2
Analogue Input Type	current 4...20 mA current 0...20 mA voltage 0...10 V voltage - 10...10 V

Complementary

Analogue Input Resolution	16 bits 15 bits + sign
Permissible Continuous Overload	13 V voltage 40 mA current
Input Impedance	<= 50 Ohm current >= 1 MOhm voltage
Lsb Value	0.153 mV 0...10 V voltage 0.305 mV - 10...10 V voltage 0.305 µA 0...20 mA current 0.244 µA 4...20 mA current
Conversion Time	1 ms + 1 ms per channel + 1 controller cycle time
Sampling Duration	1 ms
Absolute Accuracy Error	+/- 0.1 % of full scale at 77 °F (25 °C) +/- 1 % of full scale
Temperature Drift	+/- 0.006 %FS/°C
Repeat Accuracy	+/-0.5 %FS
Non-Linearity	+/- 0.01 %FS
Cross Talk	<= 1 LSB
[Us] Rated Supply Voltage	24 V DC
Supply Voltage Limits	20.4…28.8 V
Type Of Cable	Twisted shielded pairs cable <98.43 ft (30 m) input
Current Consumption	30 mA 5 V DC via bus connector no load 40 mA 5 V DC via bus connector full load 25 mA 24 V DC via external supply

Price is “List Price” and may be subject to a trade discount – check with your local distributor or retailer for actual price.

Disclaimer: This documentation is not intended as a substitute for and is not to be used for determining suitability or reliability of these products for specific user applications

Local Signalling	for PWR 1 LED (green)
Electrical Connection	11 x 2.5 mm² removable screw terminal block pitch 5.08 mm for inputs and supply
Insulation	Between input and supply 1500 V AC Between input and internal logic 500 V AC
Marking	CE
Surge Withstand	1 kV power supply common mode IEC 61000-4-5 0.5 kV power supply differential mode IEC 61000-4-5 1 kV input common mode IEC 61000-4-5
Mounting Support	Top hat type TH35-15 rail IEC 60715 Top hat type TH35-7.5 rail IEC 60715 plate or panel with fixing kit
Height	3.54 in (90 mm)
Depth	2.76 in (70 mm)
Width	0.93 in (23.6 mm)
Net Weight	0.25 lb(US) (0.115 kg)

Environment

Standards	IEC 61131-2
Product Certifications	CE UKCA RCM EAC cULus cULus HazLoc
Resistance To Electrostatic Discharge	8 kV in air IEC 61000-4-2 4 kV on contact IEC 61000-4-2
Resistance To Electromagnetic Fields	9.14 V/m (10 V/m) 80 MHz...1 GHz IEC 61000-4-3 2.74 V/m (3 V/m) 1.4 GHz...2 GHz IEC 61000-4-3 0.91 V/m (1 V/m) 2 GHz...3 GHz IEC 61000-4-3
Resistance To Magnetic Fields	98.43 A/m (30 A/m) IEC 61000-4-8
Resistance To Fast Transients	1 kV IEC 61000-4-4 I/O)
Resistance To Conducted Disturbances	10 V 0.15...80 MHz IEC 61000-4-6 3 V spot frequency (2, 3, 4, 6.2, 8.2, 12.6, 16.5, 18.8, 22, 25 MHz) Marine specification (LR, ABS, DNV, GL)
Electromagnetic Emission	Radiated emissions 40 dBµV/m QP class A 10 m)30…230 MHz IEC 55011 Radiated emissions 47 dBµV/m QP class A 10 m)230…1000 MHz IEC 55011
Immunity To Microbreaks	10 ms
Ambient Air Temperature For Operation	14…131 °F (-10…55 °C) horizontal installation 14…95 °F (-10…35 °C) vertical installation
Ambient Air Temperature For Storage	-13…158 °F (-25…70 °C)
Relative Humidity	10…95 %, without condensation in operation) 10…95 %, without condensation in storage)
Ip Degree Of Protection	IP20
Pollution Degree	2
Operating Altitude	0...6561.68 ft (0...2000 m)
Storage Altitude	0.00…9842.52 ft (0…3000 m)
Vibration Resistance	3.5 mm 5…8.4 Hz DIN rail 3 gn 8.4…150 Hz DIN rail
Shock Resistance	15 gn 11 ms

Ordering and shipping details

Category	US10MSX22533
Discount Schedule	0MSX
Gtin	3606480648885
Returnability	Yes
Country Of Origin	US

Packing Units

Unit Type Of Package 1	PCE
Number Of Units In Package 1	1
Package 1 Height	2.94 in (7.46 cm)
Package 1 Width	4.19 in (10.645 cm)
Package 1 Length	5.00 in (12.707 cm)
Package 1 Weight	7.76 oz (220.0 g)
Unit Type Of Package 2	S04
Number Of Units In Package 2	42
Package 2 Height	11.81 in (30 cm)
Package 2 Width	15.75 in (40 cm)
Package 2 Length	23.62 in (60 cm)
Package 2 Weight	22.80 lb(US) (10.341 kg)
Unit Type Of Package 3	P12
Number Of Units In Package 3	504
Package 3 Height	41.34 in (105 cm)
Package 3 Width	47.24 in (120 cm)
Package 3 Length	31.50 in (80 cm)
Package 3 Weight	295.42 lb(US) (134 kg)

Sustainability

Green Premium™ label is Schneider Electric's commitment to delivering products with best-in-class environmental performance. Green Premium promises compliance with the latest regulations, transparency on environmental impacts, as well as circular and low-CO_2 products.

Guide to assessing product sustainability is a white paper that clarifies global eco-label standards and how to interpret environmental declarations.

Learn more about Green Premium >

Guide to assess a product's sustainability >

Transparency RoHS/REACh

Well-being performance

Toxic Heavy Metal Free	
Mercury Free	
Rohs Exemption Information	Yes
Pvc Free	

Certifications & Standards

Reach Regulation	REACh Declaration
Eu Rohs Directive	Pro-active compliance (Product out of EU RoHS legal scope) EU RoHS Declaration
China Rohs Regulation	China RoHS declaration
Environmental Disclosure	Product Environmental Profile
Weee	The product must be disposed on European Union markets following specific waste collection and never end up in rubbish bins.
Circularity Profile	End of Life Information
California Proposition 65	WARNING: This product can expose you to chemicals including: Lead and lead compounds, which is known to the State of California to cause cancer and birth defects or other reproductive harm. For more information go to www.P65Warnings.ca.gov

Dimensions Drawings

Dimensions

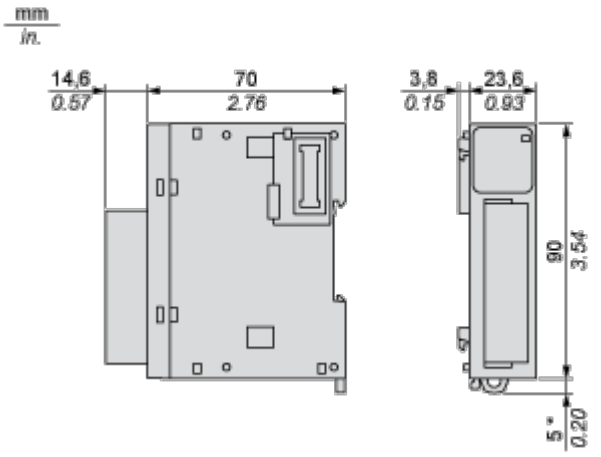

(*) 8.5 mm/0.33 in when the clamp is pulled out.

Mounting and Clearance

Spacing Requirements

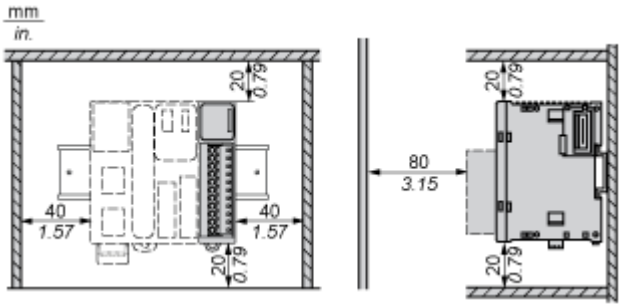

Mounting on a Rail

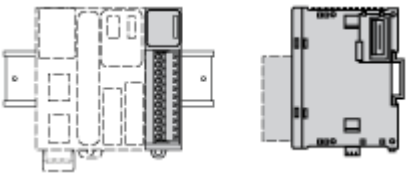

Incorrect Mounting

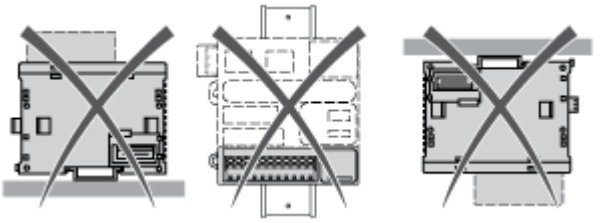

Mounting on a Panel Surface

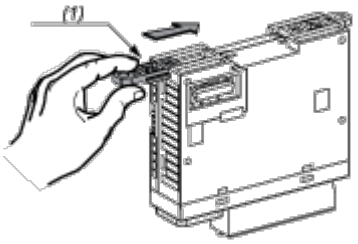

(1) Install a mounting strip

Mounting Hole Layout

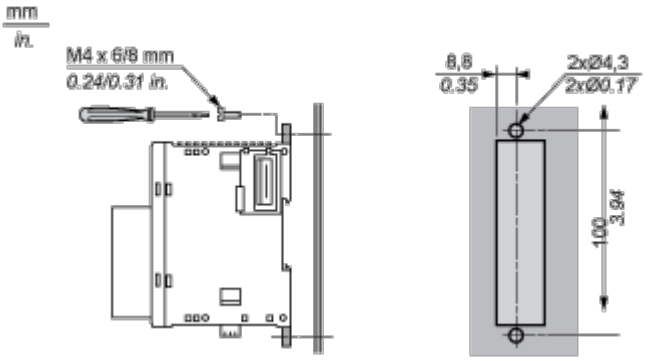

Connections and Schema

Analogue Input Module

Wiring Diagram (Current / Voltage)

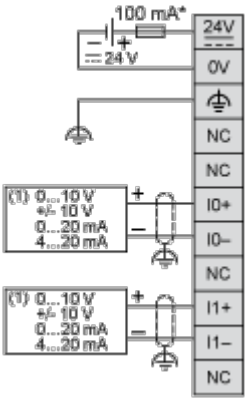

(*) Type T fuse

(1) Current/Voltage analog output device