Product data sheet

Specifications

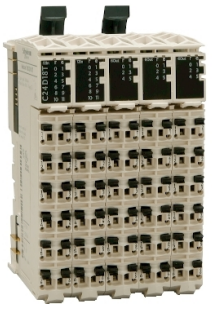

compact I/O expansion block, Modicon TM5, 36 IO, 24 DI, 12 DO relay

TM5C24D12R

Product availability: Non-Stock - Not normally stocked in distribution facility

Price*: 670.00 USD

Main

Range Of Product	Modicon TM5
Product Or Component Type	Compact I/O expansion block

Complementary

Enclosure Material	Plastic
Color	White
Input/Output Number	36
For Enclosure Nominal Dimensions	24 I + 12 O
Number Of Modules	Digital input 2 x 12 Relay output 2 x 6
Discrete Input Number	24
Discrete Input Voltage	24 V
Discrete Input Voltage Type	DC
Input Voltage Limits	20.4...28.8 V
Discrete Input Logic	Sink
Discrete Input Current	3.75 mA
Input Impedance	6.4 kOhm
Analogue Input Number	0
Discrete Output Number	12
Discrete Output Type	Relay
Wiring Mode	1 wire discrete input
Output Voltage	30 V DC 240 V AC
Output Voltage Limits	24...36 V DC 184...276 V AC
Discrete Output Function	1 NO
Discrete Output Logic	Source or sink
Discrete Output Current	2 A per output
Voltage State 0 Guaranteed	<= 5 V
Voltage State 1 Guaranteed	>= 15 V
Input Filtering	<= 100 ms hardware <= 25 ms configurable by software

Price is “List Price” and may be subject to a trade discount – check with your local distributor or retailer for actual price.

Disclaimer: This documentation is not intended as a substitute for and is not to be used for determining suitability or reliability of these products for specific user applications

Response Time	<= 12 ms from state 0 to state 1 output <= 10 ms from state 1 to state 0 output
Minimum Switching Current	10 mA 5 V DC
Isolation	500 Vrms AC insulation between channel and bus No insulation between channels
Mechanical Durability	20000000 cycles
Current Consumption	68 mA 5 V DC bus 165 mA 24 V DC input/output
Maximum Power Dissipation In W	4.3 W
Local Signalling	for input status 24 LEDs (green) for power supply 4 LEDs (green) for power supply 4 LEDs (red) for output status 12 LEDs (yellow)
Electrical Connection	Removable spring terminal block
Marking	CE
Surge Withstand	0.5 kV differential mode 24 V DC IEC 61000-4-5 1 kV common mode 24 V DC IEC 61000-4-5 1 kV differential mode 230 V AC IEC 61000-4-5 2 kV common mode 230 V AC IEC 61000-4-5
Electromagnetic Compatibility	EN/IEC 61000-4-6
Disturbance Radiated/Conducted	CISPR 11

Environment

Standards	CSA C22.2 No 213 CSA C22.2 No 142 IEC 61131-2 UL 508
Product Certifications	cULus GOST-R CSA C-tick
Ambient Air Temperature For Operation	14…122 °F (-10…50 °C) vertical installation) 14…140 °F (-10…60 °C) horizontal installation)
Ambient Air Temperature For Storage	-40…158 °F (-40…70 °C)
Relative Humidity	5…95 % without condensation
Ip Degree Of Protection	IP20IEC 61131-2
Pollution Degree	2 IEC 60664
Operating Altitude	0...6561.68 ft (0...2000 m)
Storage Altitude	0.00…9842.52 ft (0…3000 m)
Vibration Resistance	1 gn 8.4…150 Hz DIN rail 3.5 mm 5…8.4 Hz DIN rail
Shock Resistance	15 gn 11 ms
Resistance To Electrostatic Discharge	4 kV on contact IEC 61000-4-2 8 kV in air IEC 61000-4-2
Resistance To Electromagnetic Fields	0.91 V/m (1 V/m) 2...2.7 GHz IEC 61000-4-3 9.14 V/m (10 V/m) 80...2000 MHz IEC 61000-4-3
Resistance To Fast Transients	1 kV IEC 61000-4-4 I/O) 1 kV IEC 61000-4-4 shielded cable) 2 kV IEC 61000-4-4 power lines)
Mounting Support	DIN rail
Net Weight	0.57 lb(US) (0.26 kg)

Ordering and shipping details

Category	US1PC1222532
Discount Schedule	PC12
Gtin	3595864074382
Returnability	No
Country Of Origin	AT

Packing Units

Unit Type Of Package 1	PCE
Number Of Units In Package 1	1
Package 1 Height	2.72 in (6.900 cm)
Package 1 Width	3.62 in (9.200 cm)
Package 1 Length	4.33 in (11.000 cm)
Package 1 Weight	10.19 oz (289.000 g)
Unit Type Of Package 2	S03
Number Of Units In Package 2	36
Package 2 Height	11.81 in (30.000 cm)
Package 2 Width	11.81 in (30.000 cm)
Package 2 Length	15.75 in (40.000 cm)
Package 2 Weight	23.86 lb(US) (10.821 kg)

Contractual warranty

Warranty	18 months

Sustainability

Green Premium™ label is Schneider Electric's commitment to delivering products with best-in-class environmental performance. Green Premium promises compliance with the latest regulations, transparency on environmental impacts, as well as circular and low-CO_2 products.

Guide to assessing product sustainability is a white paper that clarifies global eco-label standards and how to interpret environmental declarations.

Learn more about Green Premium >

Guide to assess a product's sustainability >

Transparency RoHS/REACh

Well-being performance

Toxic Heavy Metal Free	
Mercury Free	
Rohs Exemption Information	Yes
Pvc Free	

Certifications & Standards

Reach Regulation	REACh Declaration
Eu Rohs Directive	Pro-active compliance (Product out of EU RoHS legal scope)
China Rohs Regulation	China RoHS declaration
Environmental Disclosure	Product Environmental Profile
Weee	The product must be disposed on European Union markets following specific waste collection and never end up in rubbish bins.
Circularity Profile	End of Life Information
California Proposition 65	WARNING: This product can expose you to chemicals including: Lead and lead compounds, which is known to the State of California to cause cancer and birth defects or other reproductive harm. For more information go to www.P65Warnings.ca.gov

Presentation

TM5 Compact I/O Module

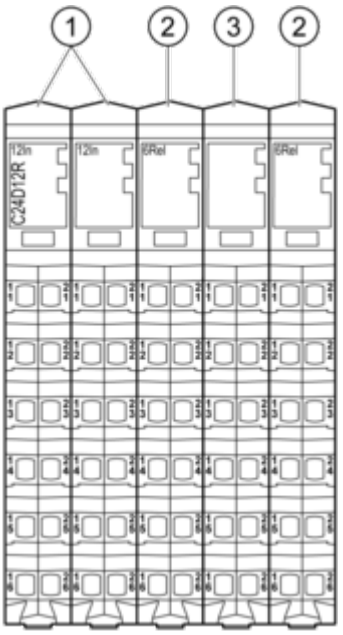

N°	Designation
1	Input electronic module / 12 digital inputs
2	Relay output electronic module / 6 relay outputs
3	Dummy module

Dimensions Drawings

Compact I/O Module

Dimensions

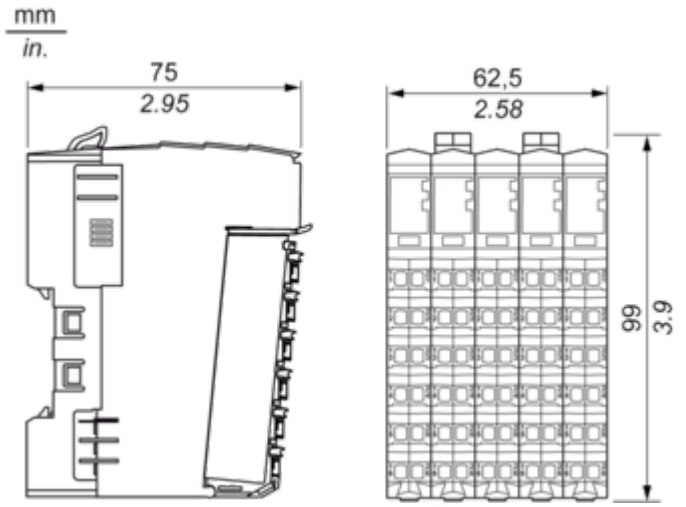

Mounting and Clearance

TM5 System

Spacing Requirements

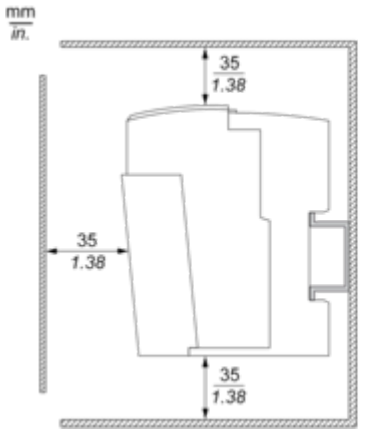

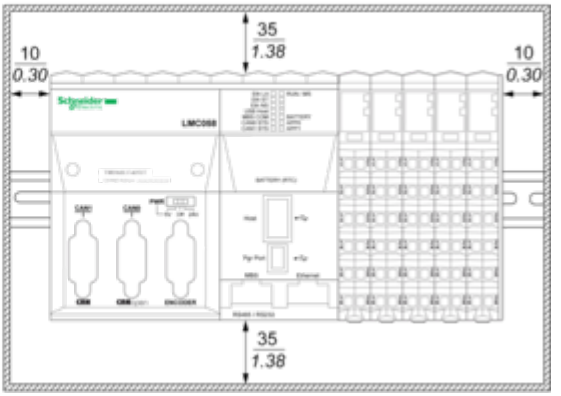

Mounting on a DIN Rail

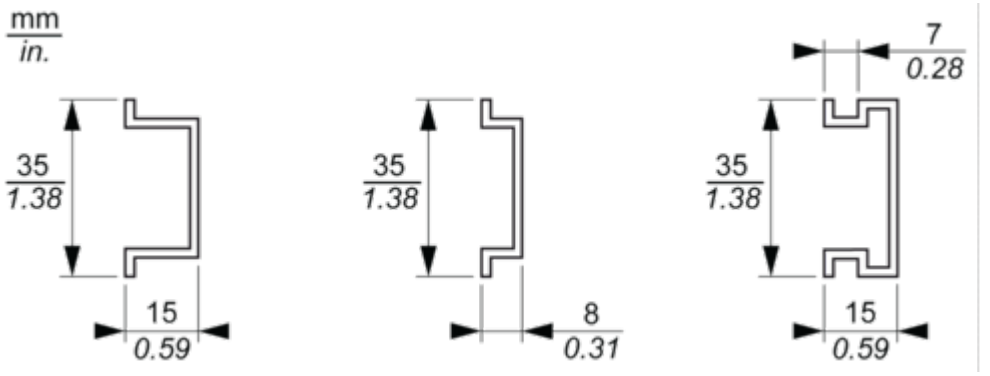

Connections and Schema

TM5 System Wiring Recommendations

Wire Sizes to Use with the Removable Spring Terminal Blocks

mm / in. 9 / 0.35				
mm²	0,08…2,5	0,25…2,5	0,25…1,5	2 x 0,25...2 x 0,75
AWG	28…14	24…14	24…16	2 x 24…2 x 18

Digital Input 12In

Wiring Diagram

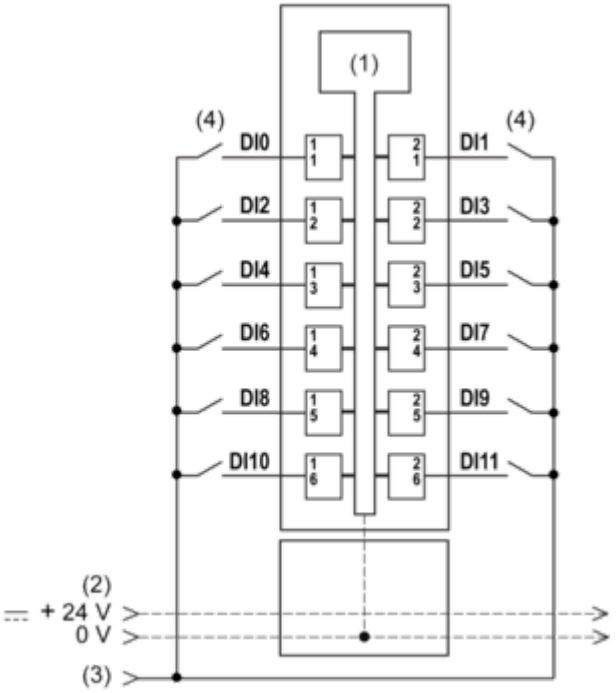

1 Internal electronics
2 24 Vdc I/O power segment integrated into the bus bases
3 24 Vdc I/O power segment by external connection
4 2-wire sensor

Digital Output Relay 6Rel

Wiring Diagram

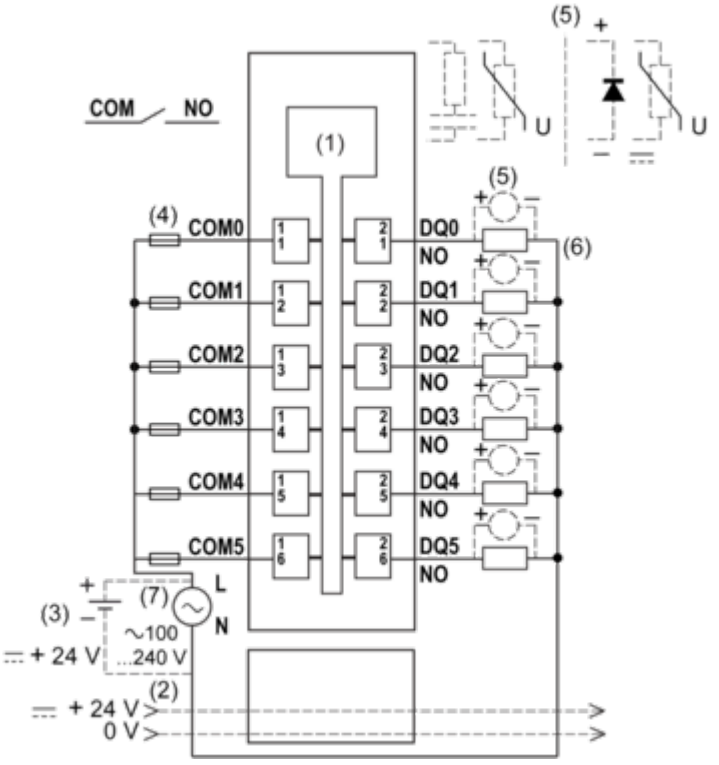

1 Internal electronics
2 24 Vdc I/O power segment integrated into the bus bases
3 External isolated power supply 24 Vdc
4 External fuse type T slow-blow 2 A 250 V
5 Inductive load protection
6 2-wire load
7 External power supply 100...240 Vac

Dummy Module

Wiring Diagram

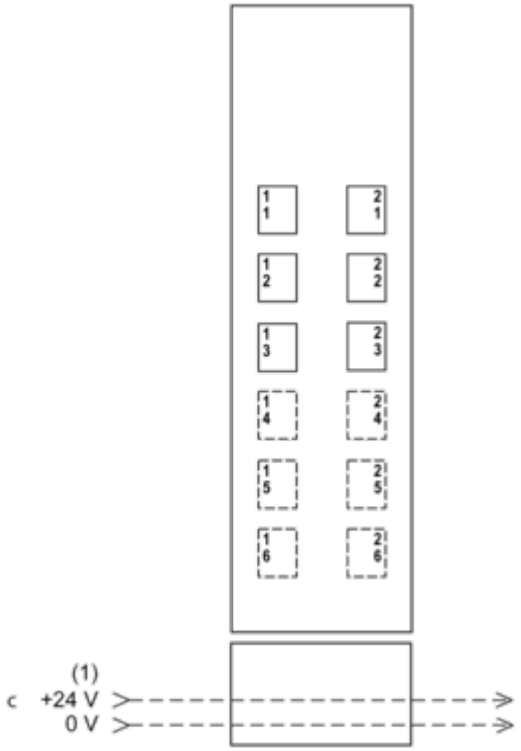

1 24 Vdc I/O power segment integrated into the bus bases

Performance Curves

Digital Output Relay Electronic Module

Electric Durability

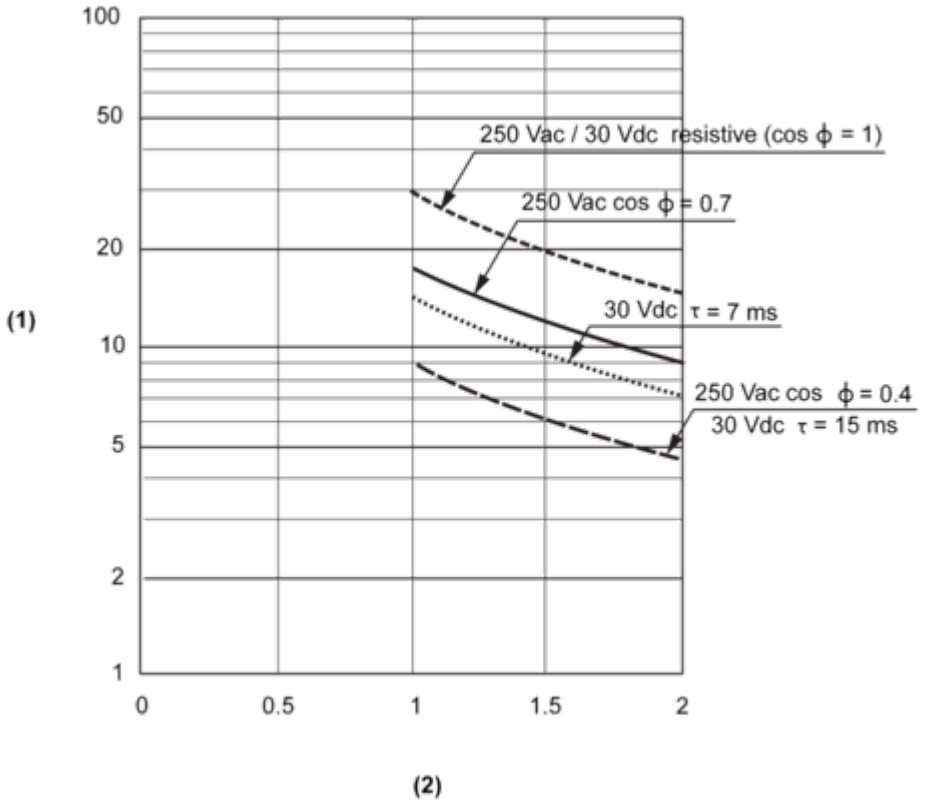

1 Switching procedures ($x10^4$)
2 Switching current in A