Product data sheet

Specifications

Analog I/O expansion block, Modicon TM7, IP67, 2 AI/2AO, 0 20 mA, M12 connector

TM7BAM4CLA

Product availability: Non-Stock - Not normally stocked in distribution facility

Price*: 921.00 USD

Main

Range Of Product	Modicon TM7
Product Or Component Type	Analog I/O expansion block
Range Compatibility	Modicon LMC058 Modicon M258
Enclosure Material	Plastic
Bus Type	TM7 bus
[Ue] Rated Operational Voltage	24 V DC
Input/Output Number	4
Input/Output Number Of Block	2 I + 2 O

Complementary

Analogue Input Number	2
Analogue Input Type	Current
Analogue Input Range	0...20 mA
Analogue Input Resolution	12 bits
Analogue Output Number	2
Analogue Output Type	Current
Analogue Output Range	0...20 mA
Sensor Power Supply	24 V, 500 mA for all channels overload, short-circuit and reverse polarity protection
Analogue Output Resolution	12 bits
Electrical Connection	1 male connector M12 - B coding - 4 ways bus IN 1 female connector M12 - B coding - 4 ways bus OUT 1 male connector M8 - 4 ways power IN 1 female connector M8 - 4 ways power OUT 4 female connectors M12 - A coding - 5 ways actuator
Local Signalling	for bus diagnostic 2 LEDs for sensor/actuator power supply status 2 LEDs
Operating Position	Any position
Fixing Mode	By 2 screws
Net Weight	0.44 lb(US) (0.2 kg)

Environment

Standards	IEC 61131-2

Price is “List Price” and may be subject to a trade discount – check with your local distributor or retailer for actual price.

Disclaimer: This documentation is not intended as a substitute for and is not to be used for determining suitability or reliability of these products for specific user applications

Product Certifications	cURus C-tick GOST-R ATEX II 3g EEx nA II T5
Marking	CE
Ambient Air Temperature For Operation	14…140 °F (-10…60 °C)
Ambient Air Temperature For Storage	-13…185 °F (-25…85 °C)
Relative Humidity	5…95 % without condensation or dripping water
Pollution Degree	2 IEC 60664
Ip Degree Of Protection	IP67 conforming to IEC 61131-2
Operating Altitude	0...6561.68 ft (0...2000 m)
Storage Altitude	0.00…9842.52 ft (0…3000 m)
Vibration Resistance	7.5 mm constant amplitude 2…8 Hz)IEC 60721-3-5 Class 5M3 2 gn constant acceleration 8…200 Hz)IEC 60721-3-5 Class 5M3 4 gn constant acceleration 200…500 Hz)IEC 60721-3-5 Class 5M3
Shock Resistance	30 gn 11 ms IEC 60721-3-5 Class 5M3
Resistance To Electrostatic Discharge	6 kV in contact IEC 61000-4-2 8 kV in air IEC 61000-4-2
Resistance To Electromagnetic Fields	9.14 V/m (10 V/m) 0.08…2 Hz IEC 61000-4-3 0.91 V/m (1 V/m) 2…2.7 Hz IEC 61000-4-3
Resistance To Fast Transients	2 kV IEC 61000-4-4 power supply) 1 kV IEC 61000-4-4 input/output) 1 kV IEC 61000-4-4 shielded cable)
Surge Withstand For Dc 24 V Circuit	1 kV power supply (common mode) IEC 61000-4-5 0.5 kV power supply (differential mode) IEC 61000-4-5 1 kV unshielded links (common mode) IEC 61000-4-5 0.5 kV unshielded links (differential mode) IEC 61000-4-5 1 kV shielded links (common mode) IEC 61000-4-5 0.5 kV shielded links (differential mode) IEC 61000-4-5
Electromagnetic Compatibility	EN/IEC 61000-4-6
Disturbance Radiated/Conducted	CISPR 11

Ordering and shipping details

Category	US1PC1222532
Discount Schedule	PC12
Gtin	3595864093222
Returnability	No
Country Of Origin	AT

Packing Units

Unit Type Of Package 1	PCE
Number Of Units In Package 1	1
Package 1 Height	1.97 in (5.000 cm)
Package 1 Width	2.28 in (5.800 cm)
Package 1 Length	4.17 in (10.600 cm)
Package 1 Weight	8.18 oz (232.000 g)
Unit Type Of Package 2	S02
Number Of Units In Package 2	24

Package 2 Height	5.91 in (15.000 cm)
Package 2 Width	11.81 in (30.000 cm)
Package 2 Length	15.75 in (40.000 cm)
Package 2 Weight	12.74 lb(US) (5.778 kg)

Contractual warranty

Warranty	18 months

Sustainability

Green Premium™ label is Schneider Electric's commitment to delivering products with best-in-class environmental performance. Green Premium promises compliance with the latest regulations, transparency on environmental impacts, as well as circular and low-CO_2 products.

Guide to assessing product sustainability is a white paper that clarifies global eco-label standards and how to interpret environmental declarations.

Learn more about Green Premium >

Guide to assess a product's sustainability >

Transparency RoHS/REACh

Well-being performance

Reach Free Of Svhc	
Toxic Heavy Metal Free	
Mercury Free	
Rohs Exemption Information	Yes
Pvc Free	

Certifications & Standards

Reach Regulation	REACh Declaration
Eu Rohs Directive	Pro-active compliance (Product out of EU RoHS legal scope) EU RoHS Declaration
China Rohs Regulation	China RoHS declaration
Environmental Disclosure	Product Environmental Profile
Weee	The product must be disposed on European Union markets following specific waste collection and never end up in rubbish bins.
Circularity Profile	End of Life Information
California Proposition 65	WARNING: This product can expose you to chemicals including: Lead and lead compounds, which is known to the State of California to cause cancer and birth defects or other reproductive harm. For more information go to www.P65Warnings.ca.gov

Presentation

Analog Mixed Block

Description

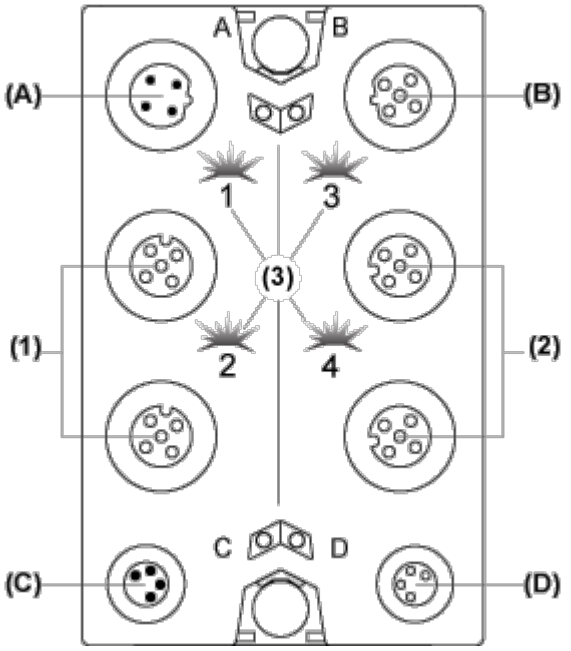

(A) TM7 bus IN connector

(B) TM7 bus OUT connector

(C) 24 Vdc power IN connector

(D) 24 Vdc power OUT connector

(1) Input connectors

(2) Output connectors

(3) Status LEDs

Connector and Channel Assignments

I/O connectors	Channel type	Channels
1	Input	I0
2	Input	I1
3	Output	Q0
4	Output	Q1

Dimensions Drawings

TM7 Block, Size 1

Dimensions

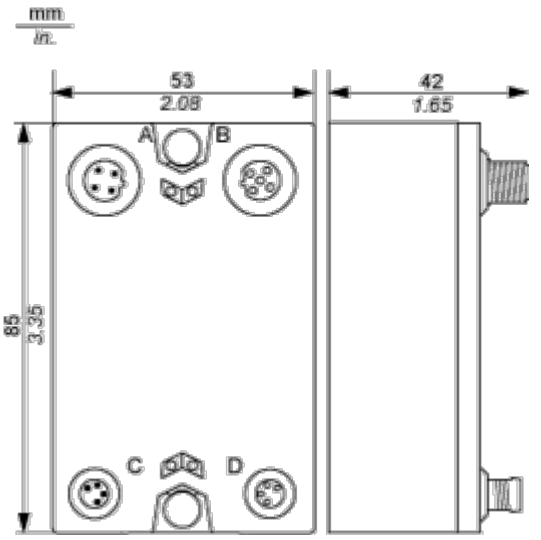

Mounting and Clearance

Spacing Requirements

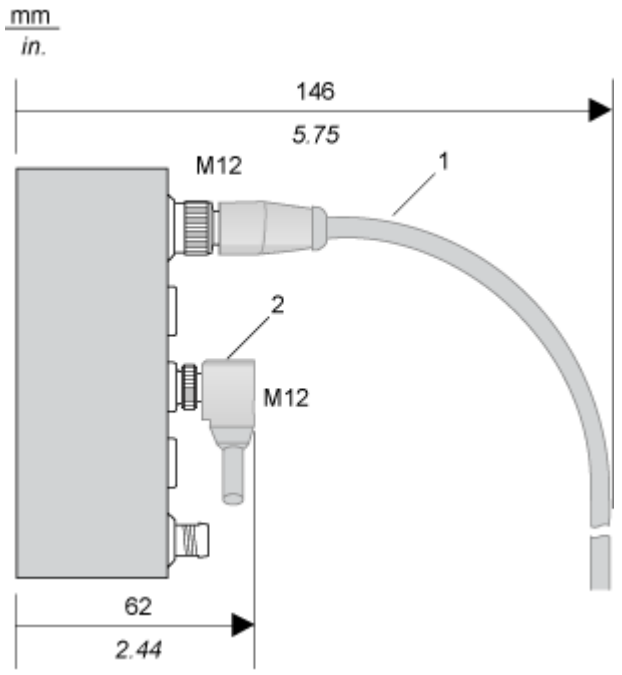

1 Straight cable

2 Elbowed cable

Installation Guidelines

TM7 Block on an Aluminium Frame

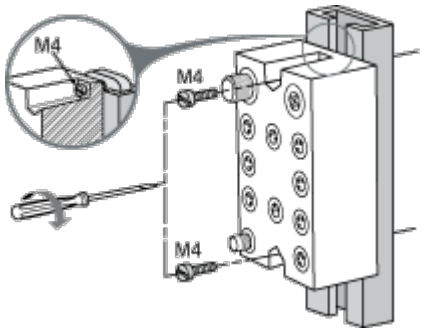

NOTE: Maximum torque to fasten the required M4 screws is 0.6 N.m (5.3 lbf-in).

TM7 Block on a DIN Rail

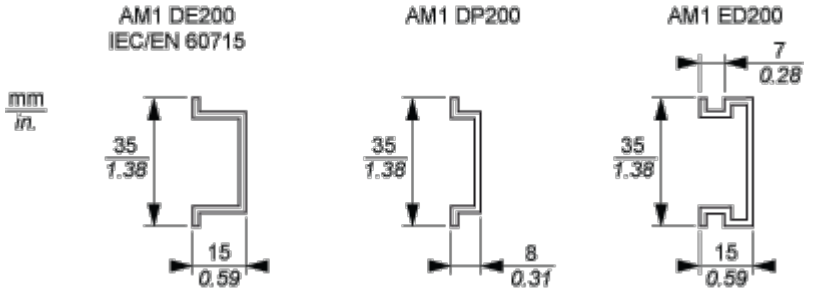

NOTE: Only size 1 (smallest) blocks can be installed on DIN rail with the TM7ACMP mounting plate.

TM7 Block Directly on the Machine

Drilling template of the block:

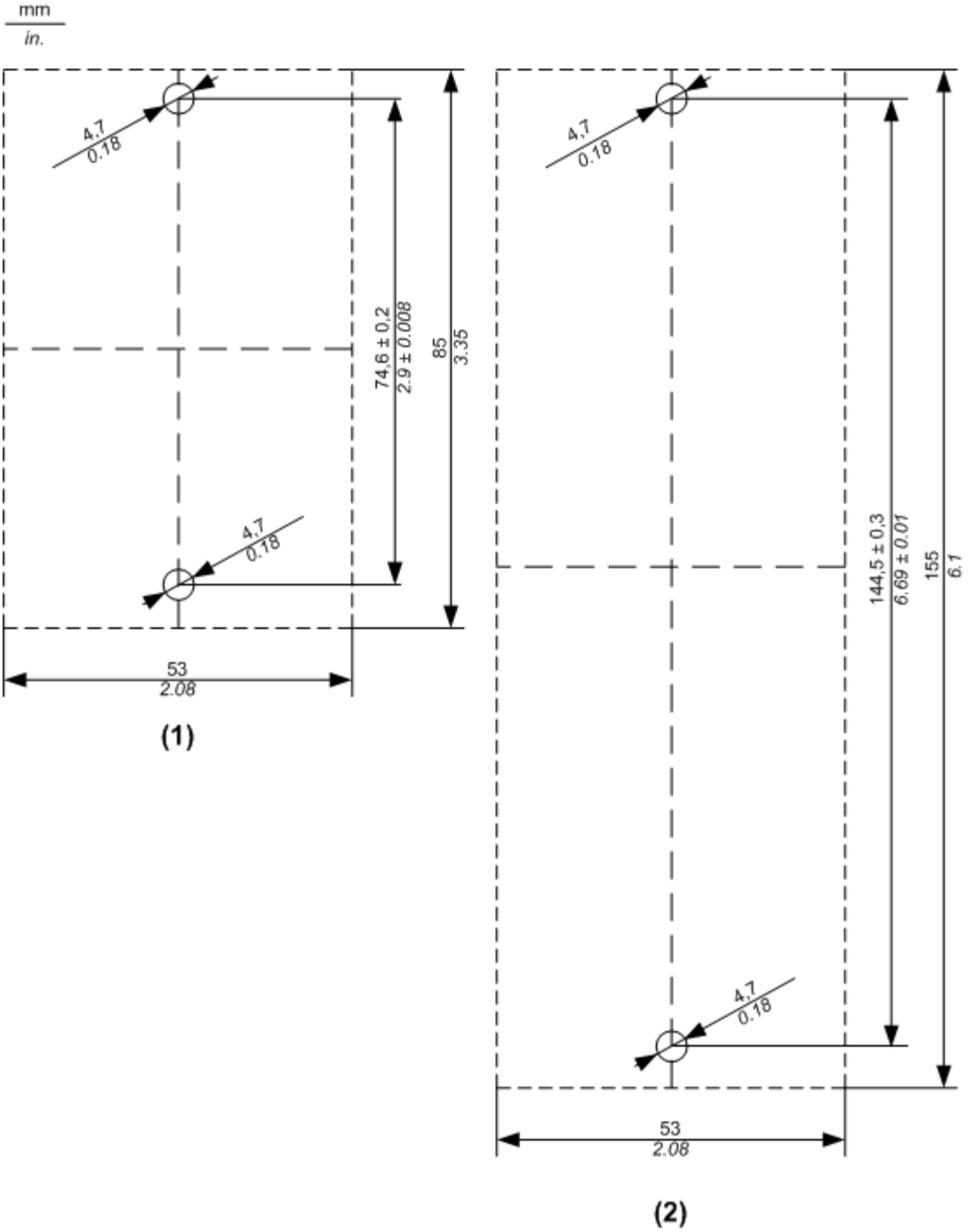

(1) Size 1

(2) Size 2

The thickness of the base plate should be taken into consideration when defining the screw length.

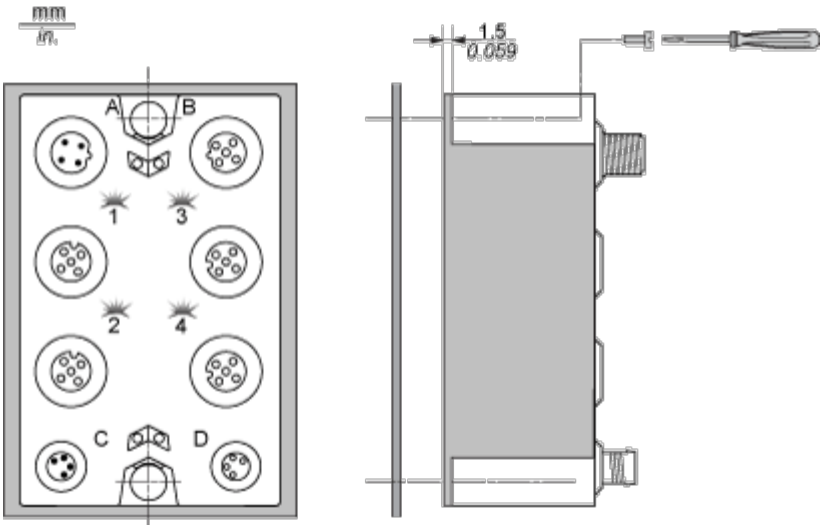

NOTE: Maximum torque to fasten the required M4 screws is 0.6 N.m (5.3 lbf-in).

Connections and Schema

Wiring Diagram

Pin Assignments for I/O Connectors

Connection	Pin	M12 Input	M12 Output
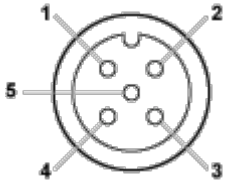	**1**	24 Vdc sensor supply	Analog output +
	2	Analog input +	24 Vdc actuator supply
	3	0 Vdc	Analog output - (0 Vdc)
	4	Analog input -	0 Vdc
	5	Shield	Shield

Wiring the Power Supply

When you provide power to a TM7 I/O block using the 24 VDC Power OUT connector of the preceding I/O block, both blocks occupy the same 24 Vdc I/O power segment. However, if you connect an external isolated power supply to the 24 Vdc Power IN connector of a TM7 I/O block, you establish a new 24 Vdc I/O power segment beginning with that I/O block.
I/O block wired with one external 24 Vdc power supply:

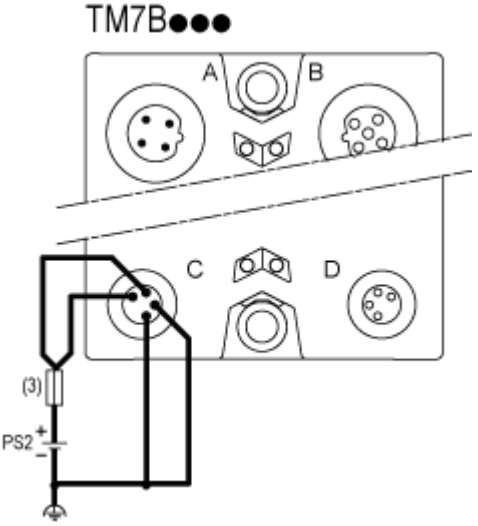

(3) External fuse, Type T slow-blow, 8 A max., 250 V

PS2 External isolated I/O power supply, 24 Vdc