Product data sheet

Specifications

Power distribution module, Modicon TM7, supply 24 V, 15 W

TM7SPS1A

Product availability: Stock - Normally stocked in distribution facility

Price*: 272.00 USD

Main

Range Of Product	Modicon TM7
Product Or Component Type	Power distribution module
Range Compatibility	Modicon LMC058 Modicon M258
Product Compatibility	Motion controller Logic controller
Product Specific Application	Supply 24 V DC I/O modules and bus TM7
[Us] Rated Supply Voltage	24 V
Supply Circuit Type	DC
Electrical Connection	1 male + 1 female connectors M8 power supply) 1 male + 1 female connectors M12 TM7 bus)

Complementary

Local Signalling	for sensor/actuator power supply status 2 LEDs
Nominal Power	15 W
Operating Position	Any position
Fixing Mode	By 2 screws
Net Weight	0.42 lb(US) (0.19 kg)

Environment

Standards	IEC 61131-2
Product Certifications	C-tick ATEX II 3g EEx nA II T5 GOST-R cURus
Marking	CE
Ambient Air Temperature For Operation	14…140 °F (-10…60 °C)
Ambient Air Temperature For Storage	-13…185 °F (-25…85 °C)
Relative Humidity	5…95 % without condensation
Operating Altitude	0...6561.68 ft (0...2000 m)
Storage Altitude	0.00…9842.52 ft (0…3000 m)
Vibration Resistance	7.5 mm constant amplitude 2…8 Hz)IEC 60721-3-5 Class 5M3 2 gn constant acceleration 8…200 Hz)IEC 60721-3-5 Class 5M3 4 gn constant acceleration 200…500 Hz)IEC 60721-3-5 Class 5M3
Shock Resistance	30 gn 11 ms IEC 60721-3-5 Class 5M3

Price is “List Price” and may be subject to a trade discount – check with your local distributor or retailer for actual price.

Disclaimer: This documentation is not intended as a substitute for and is not to be used for determining suitability or reliability of these products for specific user applications

Resistance To Electrostatic Discharge	6 kV in contact IEC 61000-4-2 8 kV in air IEC 61000-4-2
Resistance To Electromagnetic Fields	9.14 V/m (10 V/m) 0.08…2 Hz IEC 61000-4-3 0.91 V/m (1 V/m) 2…2.7 Hz IEC 61000-4-3
Resistance To Fast Transients	2 kV IEC 61000-4-4 power supply) 1 kV IEC 61000-4-4 input/output) 1 kV IEC 61000-4-4 shielded cable)
Surge Withstand	0.5 kV differential mode IEC 61000-4-5 1 kV common mode IEC 61000-4-5
Electromagnetic Compatibility	EN/IEC 61000-4-6
Disturbance Radiated/Conducted	CISPR 11

Ordering and shipping details

Category	US1PC1222532
Discount Schedule	PC12
Gtin	3595864093239
Returnability	No
Country Of Origin	AT

Packing Units

Unit Type Of Package 1	PCE
Number Of Units In Package 1	1
Package 1 Height	1.97 in (5.000 cm)
Package 1 Width	2.32 in (5.900 cm)
Package 1 Length	4.13 in (10.500 cm)
Package 1 Weight	7.48 oz (212.000 g)
Unit Type Of Package 2	S02
Number Of Units In Package 2	24
Package 2 Height	5.91 in (15.000 cm)
Package 2 Width	11.81 in (30.000 cm)
Package 2 Length	15.75 in (40.000 cm)
Package 2 Weight	11.91 lb(US) (5.402 kg)

Contractual warranty

Warranty	18 months

Sustainability

Green Premium™ label is Schneider Electric's commitment to delivering products with best-in-class environmental performance. Green Premium promises compliance with the latest regulations, transparency on environmental impacts, as well as circular and low-CO_2 products.

Guide to assessing product sustainability is a white paper that clarifies global eco-label standards and how to interpret environmental declarations.

Learn more about Green Premium >

Guide to assess a product's sustainability >

Transparency RoHS/REACh

Well-being performance

Toxic Heavy Metal Free	
Mercury Free	
Rohs Exemption Information	Yes
Pvc Free	

Certifications & Standards

Reach Regulation	REACh Declaration
Eu Rohs Directive	Pro-active compliance (Product out of EU RoHS legal scope)
China Rohs Regulation	China RoHS declaration
Environmental Disclosure	Product Environmental Profile
Weee	The product must be disposed on European Union markets following specific waste collection and never end up in rubbish bins.
Circularity Profile	End of Life Information
California Proposition 65	WARNING: This product can expose you to chemicals including: Lead and lead compounds, which is known to the State of California to cause cancer and birth defects or other reproductive harm. For more information go to www.P65Warnings.ca.gov

Presentation

TM7 Power Distribution Block (PDB)

Description

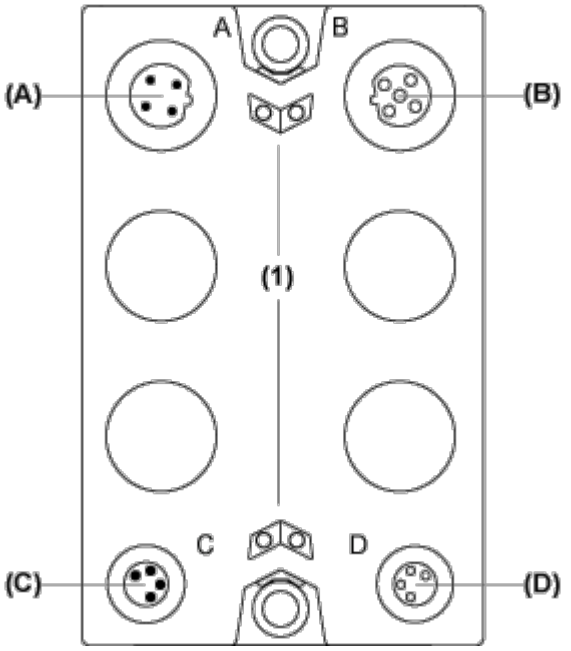

(A) TM7 bus IN connector

(B) TM7 bus OUT connector

(C) 24 Vdc power IN connector

(D) 24 Vdc power OUT connector

(1) Status LEDs

Dimensions Drawings

TM7 Block, Size 1

Dimensions

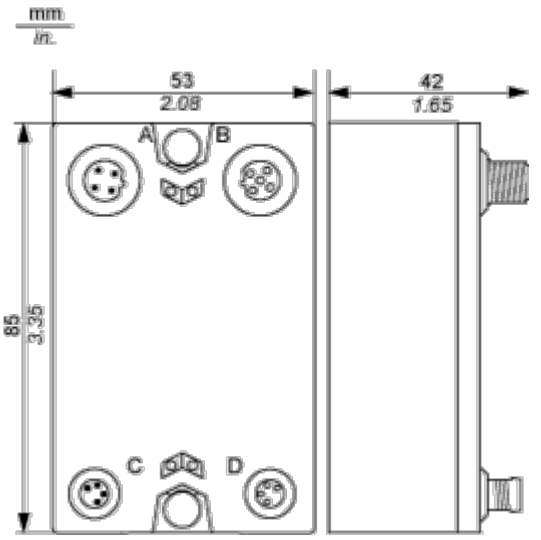

Mounting and Clearance

Spacing Requirements

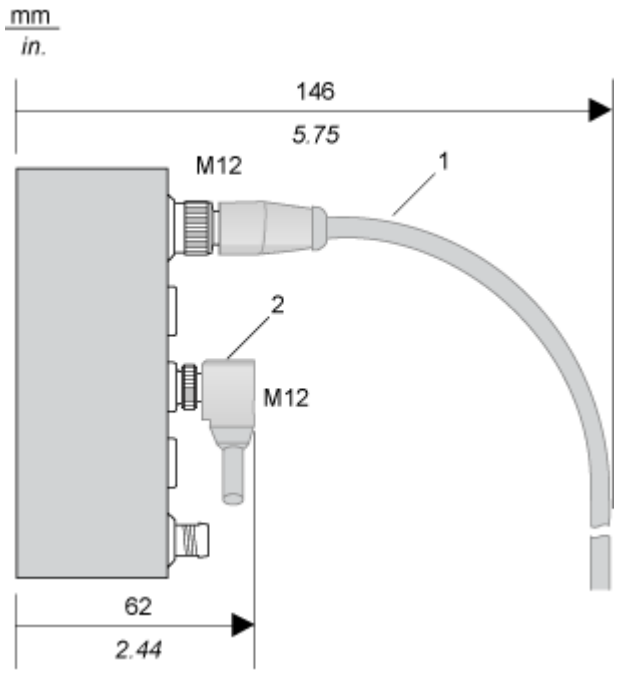

1 Straight cable

2 Elbowed cable

Installation Guidelines

TM7 Block on an Aluminium Frame

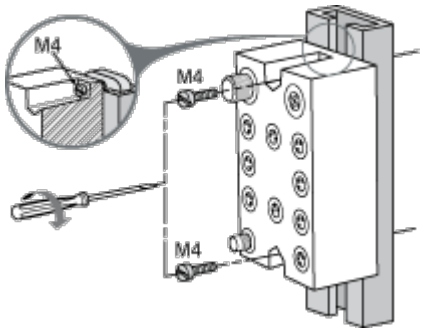

NOTE: Maximum torque to fasten the required M4 screws is 0.6 N.m (5.3 lbf-in).

TM7 Block on a DIN Rail

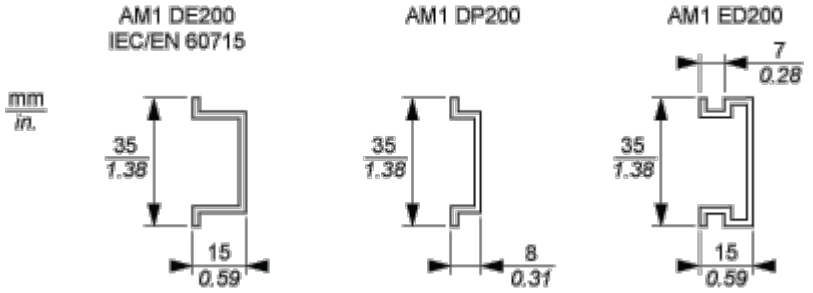

NOTE: Only size 1 (smallest) blocks can be installed on DIN rail with the TM7ACMP mounting plate.

TM7 Block Directly on the Machine

Drilling template of the block:

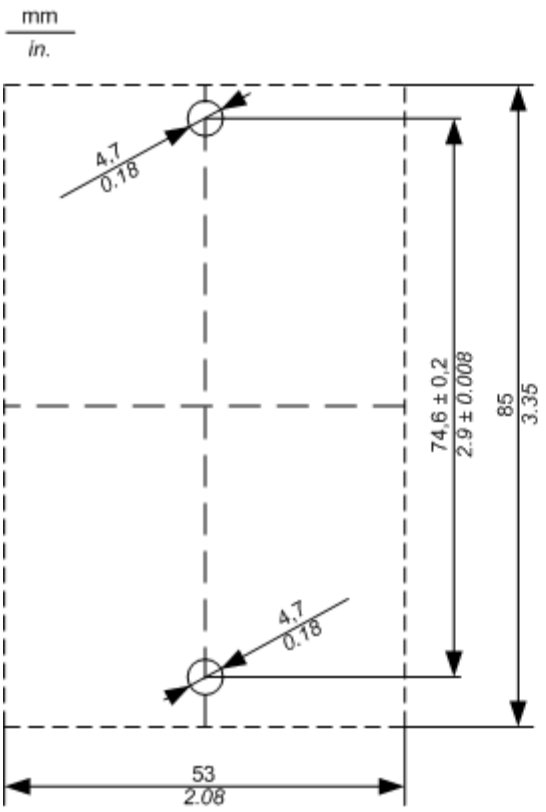

(1)

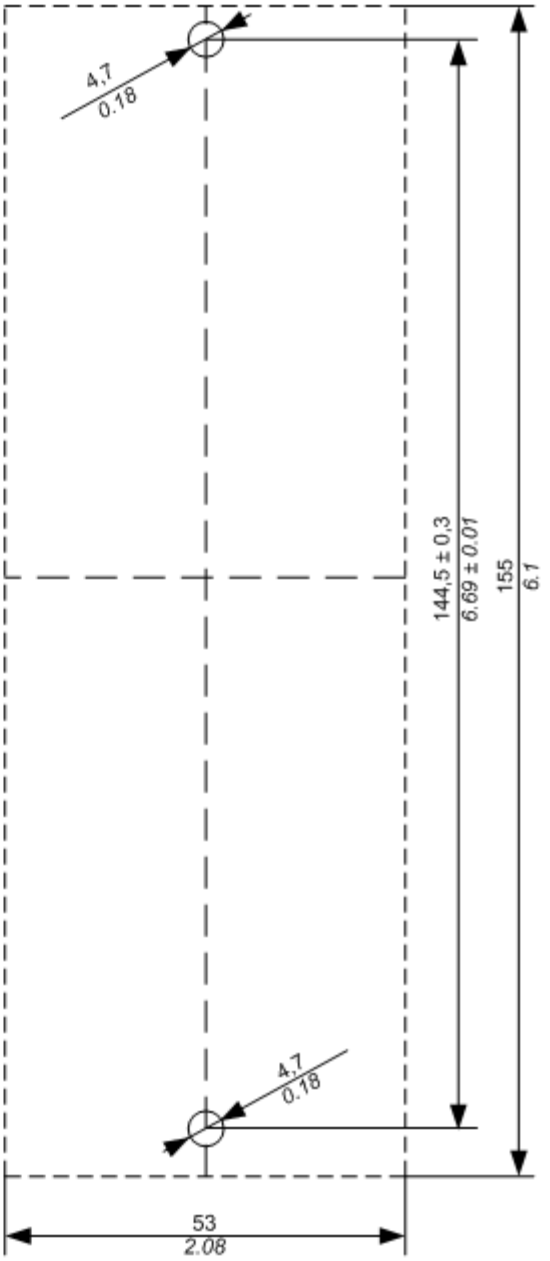

(2)

(1) Size 1

(2) Size 2

The thickness of the base plate should be taken into consideration when defining the screw length.

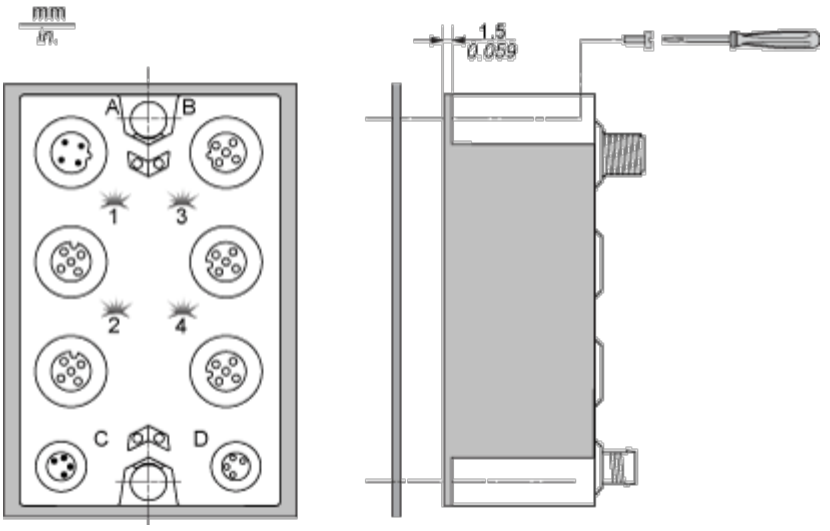

NOTE: Maximum torque to fasten the required M4 screws is 0.6 N.m (5.3 lbf-in).

Connections and Schema

Wiring Diagram

Pin Assignments

TM7 bus IN connector (A)	Pin	Designation	TM7 bus OUT connector (B)
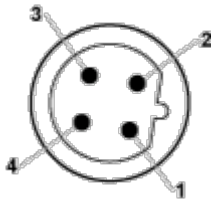	1	TM7 V+	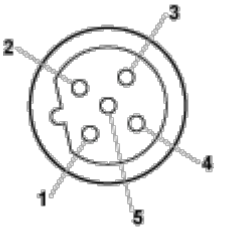
	2	TM7 Bus Data	
	3	TM7 0V	
	4	TM7 Bus Data	
	5	N.C.	

Power IN connector (C)	Pin	Designation	Power OUT connector (D)
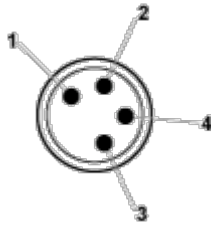	1	24 Vdc Main power	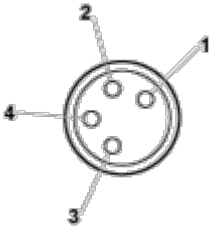
	2	24 Vdc Main power	
	3	0 Vdc	
	4	0 Vdc	

Wiring the Power Supply

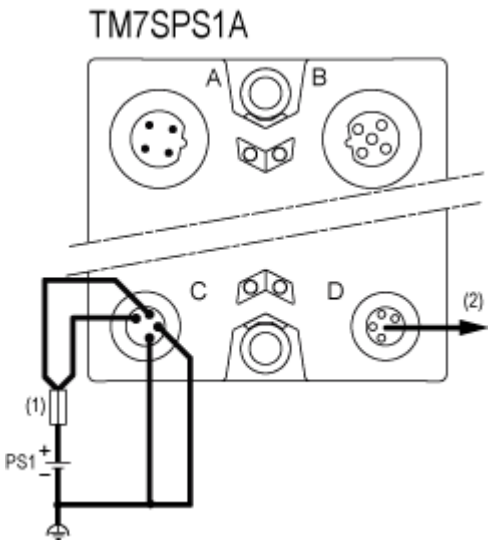

(1) External fuse, Type T slow-blow, 1 A minimum, 4 A maximum, 250 V

(2) Maximum current 4 A

PS1 External isolated main power supply, 24 Vdc