Product data sheet

Specifications

Discontinued - Service only

2 channels measurement and counter module - 1000kHz - 15mA (24VDC), 850mA (5VDC)

TSXCTY2CC

Discontinued on: Dec 2, 2020

To be end-of-service on: Dec 31, 2025

Main

Range Of Product	Modicon Premium Automation platform
Product Or Component Type	Measurement and counter module
I/O Modularity	2 channels
Electrical Circuit Type	Auxiliary output

Complementary

Counting Frequency	1000000 Hz
Incremental Encoder Frequency X1	500 kHz
Incremental Encoder Frequency X 4	250 kHz
Power Dissipation In W	7…10 W
Cycle Time	1 ms
Discrete Input Logic	Current sink auxiliary input (preset, enable and read) IEC 1131 Type 2 Resistive 2/3-wire proximity sensors PNP/NPN IEC 1131 Type 2 Resistive encoder input
Input Logic	Positive
Input Compatibility	Absolute encoder parallel output ABE7CPA11 Incremental encoder 10...30 V totem pole Incremental encoder 5 V DC RS422 Absolute encoder SSI serial output
Input Voltage	24 V 16 mA 2/3-wire proximity sensors PNP/NPN 24 V 8 mA auxiliary input (preset, enable and read) 5 V 18 mA encoder input
Input Voltage Limits	<= 5.5 V encoder input 19...30 V 2/3-wire proximity sensors PNP/NPN 19...30 V auxiliary input (preset, enable and read)
Voltage State 1 Guaranteed	>= 11 V 2/3-wire proximity sensors PNP/NPN >= 11 V auxiliary input (preset, enable and read) >= 2.4 V encoder input
Current State 1 Guaranteed	>= 6 mA 2/3-wire proximity sensors PNP/NPN) >= 6 mA auxiliary input (preset, enable and read)) >= 3.6 mA encoder input)
Voltage State 0 Guaranteed	<= 1.2 V encoder input <= 5 V 2/3-wire proximity sensors PNP/NPN <= 5 V auxiliary input (preset, enable and read)
Current State 0 Guaranteed	<= 1 mA encoder input) <= 2 mA 2/3-wire proximity sensors PNP/NPN) <= 2 mA auxiliary input (preset, enable and read))

Price is “List Price” and may be subject to a trade discount – check with your local distributor or retailer for actual price.

Disclaimer: This documentation is not intended as a substitute for and is not to be used for determining suitability or reliability of these products for specific user applications

Response Time	< 10 ms sensor voltage at return of 24 V auxiliary input (preset, enable and read) < 2.5 ms sensor voltage at loss of 24 V auxiliary input (preset, enable and read)
Input Impedance	Encoder input > 270 Ohm at U = 2.4 V 2/3-wire proximity sensors PNP/NPN 1500 Ohm at Un Auxiliary input (preset, enable and read) 3400 Ohm at Un Encoder input 400 Ohm at Un
Output Voltage	24 V DC
Nominal Output Current	0.5 A
Output Voltage Limits	19...30 V
Maximum Voltage Drop	<0.5 V at state 1
Output Compatibility	Positive logic DC inputs (resistance <= 15 kOhm) auxiliary output
Maximum Leakage Current	0.1 mA
Switching Time	< 0.250 ms
Switching Frequency	< 0.6/LI² Hz on inductive load
Output Overload Protection	Thermal tripping via program or automatically Current limiter
Output Short-Circuit Protection	Thermal tripping via program or automatically Current limiter
Output Overvoltage Protection	Zener diode
Reverse Polarity Protection	Reverse diode on supply
Checks	Sensor power supply
Current Consumption	15 mA 24 V DC 850 mA 5 V DC
Module Format	Standard
Local Signalling	for module operating (RUN) 1 LED (green) for external fault (I/O) 1 LED (red) for internal fault, module failure (ERR) 1 LED (red) for axis diagnostics available (CH.) 2 LEDs (green)
Electrical Connection	1 connector HE-10, 20 pins 2 connectors SUB-D 15
Net Weight	0.75 lb(US) (0.34 kg)

Environment

Protective Treatment	TC Conformal coating Humiseal 1A33
Ambient Air Temperature For Operation	32…140 °F (0…60 °C)
Ambient Air Temperature For Storage	-13…158 °F (-25…70 °C)
Relative Humidity	5…95 % without condensation
Operating Altitude	<= 6561.68 ft (2000 m)

Ordering and shipping details

Category	22558-TSX PREMIUM, ATRIUM & PL7 PRO
Discount Schedule	PC22
Gtin	3595863959581
Returnability	No
Country Of Origin	FR

Packing Units

Unit Type Of Package 1	PCE
Number Of Units In Package 1	1
Package 1 Height	2.17 in (5.5 cm)
Package 1 Width	7.09 in (18.0 cm)
Package 1 Length	10.24 in (26.0 cm)
Package 1 Weight	20.71 oz (587.0 g)
Unit Type Of Package 2	S04
Number Of Units In Package 2	12
Package 2 Height	11.81 in (30 cm)
Package 2 Width	15.75 in (40 cm)
Package 2 Length	23.62 in (60 cm)
Package 2 Weight	17.62 lb(US) (7.991 kg)

Contractual warranty

Warranty	18 months

Sustainability

Green Premium™ label is Schneider Electric's commitment to delivering products with best-in-class environmental performance. Green Premium promises compliance with the latest regulations, transparency on environmental impacts, as well as circular and low-CO_2 products.

Guide to assessing product sustainability is a white paper that clarifies global eco-label standards and how to interpret environmental declarations.

Learn more about Green Premium >

Guide to assess a product's sustainability >

California Proposition 65	WARNING: This product can expose you to chemicals including: Lead and lead compounds which is known to the State of California to cause cancer and birth defects or other reproductive harm. For more information go to www.P65Warnings.ca.gov

Dimensions Drawings

Standard and Extendable Racks for Modules Mounting

Dimensions of Modules and Racks

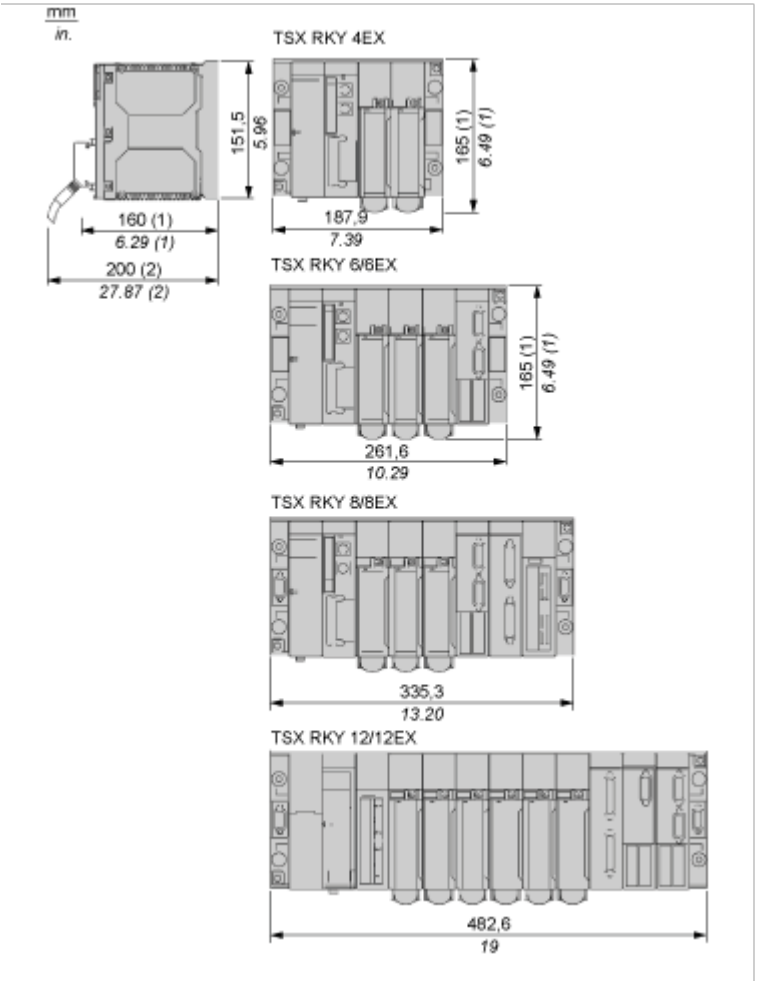

(**1**) With screw terminal block modules.
(**2**) Maximum depth for all types of modules and their associated connectors.

Connections and Schema

15-pin SUB-D Connectors of the Measurement and Counting Module

Pinout Configuration

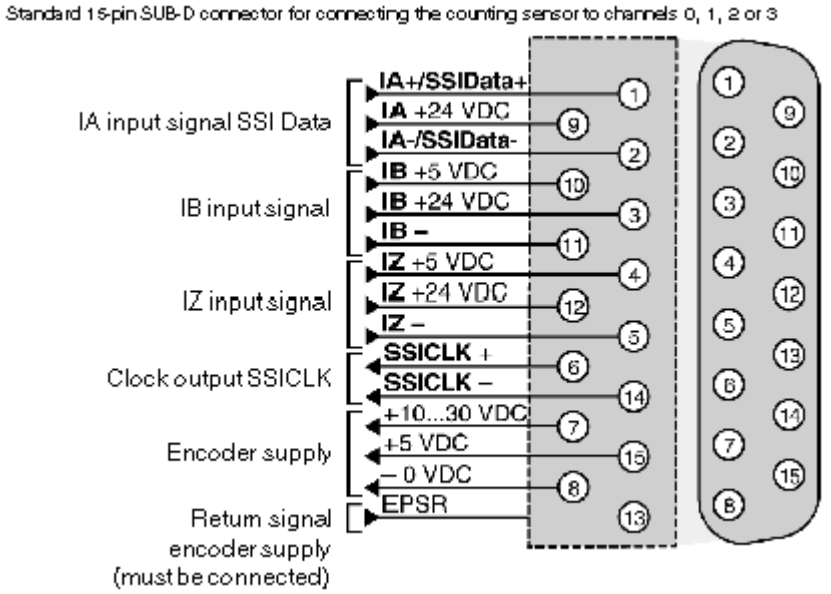

5 Vdc signal	Pins
+ IA input	1
- IA input	2
+ IB input	10
- IB input	11
+ IZ input	4
- IZ input	5
Encoder power supply:	
+5 Vdc	15
-0 Vdc	8
Encoder power supply feedback	13

10…30 Vdc signals	Pins
+ IA input	9
- IA input	2
+ IB input	3
- IB input	11

10…30 Vdc signals	Pins
+ IZ input	12
- IZ input	5
Encoder power supply:	
+10…30 Vdc	7
-0 Vdc	8
Encoder power supply feedback	13

Serial signals (absolute encoder with serial or parallel outputs, using a TELEFAST ABE7CPA11 adapter)	Pins
+ SSI Data	1
- SSI Data	2
+ SSI CLK input	6
- SSI CLK input	14
Encoder power supply:	
+5 Vdc	15
-0 Vdc	8
Encoder power supply feedback	13

20-pin HE10 Connector of the Measurement and Counting Module

Wiring Diagram

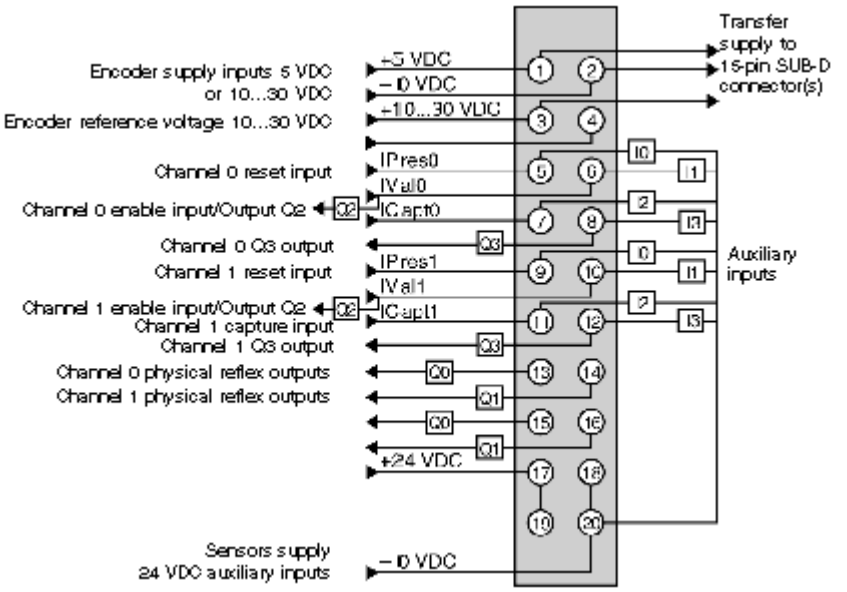

24 Vdc signals	Pins
Channel 0 auxiliary input:	
Preset IPres0	5
Confirmation IVal0/Output Q2	6
Capture ICapt0	7
Output Q3	8
Channel 1 auxiliary input:	
Preset IPres1	9
Confirmation IVal1/Output Q2	10
Capture ICapt1	11
Output Q3	12
Channel 0 reflex output:	
Output Q0	13
Output Q1	14
Channel 1 reflex output:	
Output Q0	15

24 Vdc signals	Pins
Output Q1	16

Power Supplies	Pins
Encoder power supply:	
+5 Vdc	1
- 0 Vdc	2
+10...30 Vdc	3
Encoder reference voltage +10…30 Vdc	4
Sensor power supply:	
+24 Vdc	17 or 19
-0 Vdc	18 or 20