# Product data sheet

Specifications

## Pendant control station, Harmony XAC, plastic, yellow, pistol grip, 2 booted push buttons with 2NO

XACA217

**Product availability: Stock - Normally stocked in distribution facility**

**Price*: 270.00 USD**

## Main

| | |
|---|---|
| **Range Of Product** | Harmony XAC |
| **Product Or Component Type** | Pendant control station |
| **Device Short Name** | XACA pistol grip |

## Complementary

| | |
|---|---|
| **Control Station Type** | Double insulated |
| **Enclosure Material** | Polypropylene |
| **Control Type** | Intuitive |
| **Electrical Circuit Type** | Control circuit |
| **Enclosure Type** | Complete ready for use |
| **Control Station Application** | Control of 2-speed hoist motor |
| **Control Station Composition** | 2 booted push-buttons |
| **Control Button Type** | First push-button 2 NO (2 step) raise, slow-fast<br>Second push-button 2 NO (2 step) lower, slow-fast |
| **Product Compatibility** | ZB2BE101 + ZB2BE201 for each direction |
| **Mechanical Interlocking** | With mechanical interlocking |
| **Control Station Colour** | Yellow |
| **Connections - Terminals** | Screw clamp terminals, 1 x 2.5 mm² with or without cable end<br>Screw clamp terminals, 2 x 1.5 mm² with or without cable end |
| **Standards** | IEC 60204-32<br>UL 508<br>IEC 60947-5-1<br>CSA C22.2 No 14 |
| **Product Certifications** | CSA<br>UL |
| **Protective Treatment** | TH |
| **Ambient Air Temperature For Operation** | -13…158 °F (-25…70 °C) |
| **Ambient Air Temperature For Storage** | -40…158 °F (-40…70 °C) |
| **Vibration Resistance** | 15 gn 10…500 Hz)IEC 60068-2-6 |
| **Shock Resistance** | 100 gn IEC 60068-2-27 |
| **Overvoltage Category** | Class II IEC 61140 |
| **Ip Degree Of Protection** | IP65 conforming to IEC 60529 |

Price is “List Price” and may be subject to a trade discount – check with your local distributor or retailer for actual price.

Disclaimer: This documentation is not intended as a substitute for and is not to be used for determining suitability or reliability of these products for specific user applications

| | |
|---|---|
| **Ik Degree Of Protection** | IK08 conforming to IEC 62262 |
| **Mechanical Durability** | 1000000 cycles |
| **Cable Entry** | Rubber sleeve with stepped entry 0.28…0.59 in (7…15 mm) |
| **Contact Code Designation** | A600 AC-15, Ue = 240 V, Ie = 3 A IEC 60947-5-1 appendix A<br>A600 AC-15, Ue = 600 V, Ie = 1.2 A IEC 60947-5-1 appendix A<br>Q600 DC-13, Ue = 250 V, Ie = 0.27 A IEC 60947-5-1 appendix A<br>Q600 DC-13, Ue = 600 V, Ie = 0.1 A IEC 60947-5-1 appendix A |
| **[Ithe] Conventional Enclosed Thermal Current** | 10 A |
| **[Ui] Rated Insulation Voltage** | 600 V 3)IEC 60947-1 |
| **[Uimp] Rated Impulse Withstand Voltage** | 6 kV IEC 60947-1 |
| **Contact Operation** | Slow-break<br>Staggered |
| **Maximum Resistance Across Terminals** | 25 MOhm |
| **Operating Force** | 13…15 N |
| **Short-Circuit Protection** | 10 A fuse protection cartridge gG |
| **Rated Operational Power In W** | 40 W DC-13 1000000 cycles 60 cyc/mn 120 V 0.5 inductive IEC 60947-5-1 appendix C<br>48 W DC-13 1000000 cycles 60 cyc/mn 48 V 0.5 inductive IEC 60947-5-1 appendix C<br>65 W DC-13 1000000 cycles 60 cyc/mn 24 V 0.5 inductive IEC 60947-5-1 appendix C |
| **Terminals Description Iso N°1** | (23-24)NO_CL<br>(13-14)NO |
| **Terminal Identifier** | (13-14)NO<br>(11-12)NC |
| **Net Weight** | 0.71 lb(US) (0.32 kg) |

## Ordering and shipping details

| | |
|---|---|
| **Category** | US1000T18407 |
| **Discount Schedule** | 000T |
| **Gtin** | 3389110644852 |
| **Returnability** | Yes |
| **Country Of Origin** | FR |

## Packing Units

| | |
|---|---|
| **Unit Type Of Package 1** | PCE |
| **Number Of Units In Package 1** | 1 |
| **Package 1 Height** | 2.20 in (5.6 cm) |
| **Package 1 Width** | 3.54 in (9.0 cm) |
| **Package 1 Length** | 11.81 in (30.0 cm) |
| **Package 1 Weight** | 10.48 oz (297.0 g) |
| **Unit Type Of Package 2** | S03 |
| **Number Of Units In Package 2** | 12 |
| **Package 2 Height** | 11.81 in (30.0 cm) |
| **Package 2 Width** | 11.81 in (30.0 cm) |
| **Package 2 Length** | 15.75 in (40.0 cm) |

| | |
|---|---|
| **Package 2 Weight** | 10.45 lb(US) (4.741 kg) |

## Contractual warranty

| | |
|---|---|
| **Warranty** | 18 months |

## Sustainability

**Green Premium™ label** is Schneider Electric's commitment to delivering products with best-in-class environmental performance. Green Premium promises compliance with the latest regulations, transparency on environmental impacts, as well as circular and low-$CO_2$ products.

**Guide to assessing product sustainability** is a white paper that clarifies global eco-label standards and how to interpret environmental declarations.

Learn more about Green Premium >

Guide to assess a product's sustainability >

Transparency RoHS/REACh

## Well-being performance

| | |
|---|---|
| Reach Free Of Svhc | |
| Toxic Heavy Metal Free | |
| Mercury Free | |
| Rohs Exemption Information | Yes |

## Certifications & Standards

| | |
|---|---|
| **Reach Regulation** | REACh Declaration |
| **Eu Rohs Directive** | Pro-active compliance (Product out of EU RoHS legal scope)<br>EU RoHS Declaration |
| **China Rohs Regulation** | China RoHS declaration |
| **Environmental Disclosure** | Product Environmental Profile |
| **Weee** | The product must be disposed on European Union markets following specific waste collection and never end up in rubbish bins. |
| **Circularity Profile** | No need of specific recycling operations |
| **California Proposition 65** | WARNING: This product can expose you to chemicals including: Nickel compounds, which is known to the State of California to cause cancer, and Di-isodecyl phthalate (DIDP), which is known to the State of California to cause birth defects or other reproductive harm. For more information go to www.P65Warnings.ca.gov |

Dimensions Drawings

## Dimensions

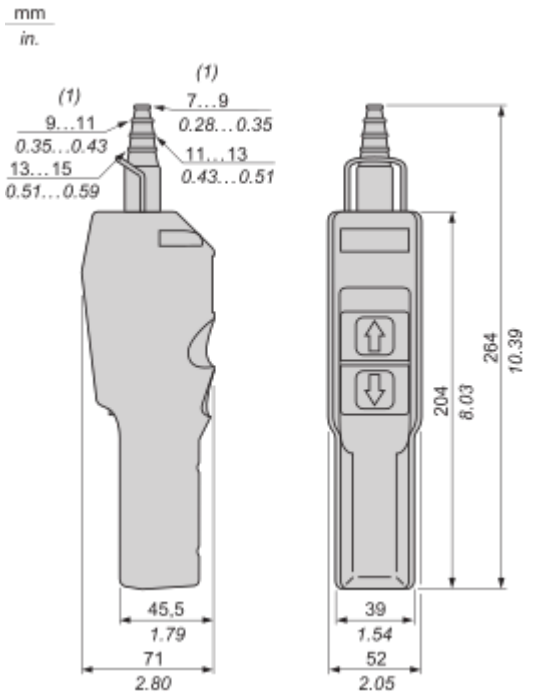


**(1)** Internal Ø

Connections and Schema

**Control of 2-Speed Reversing Motor**

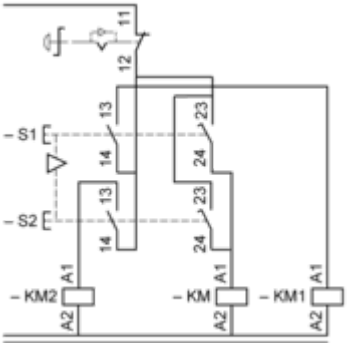

## Performance Curves

### Rated Operational Power

#### AC Supply 50/60 Hz Inductive Circuit

Operating rate: 3600 operating cycles/hour. Load factor: 0.5.
**Millions of operating cycles, AC-15 utilization category**

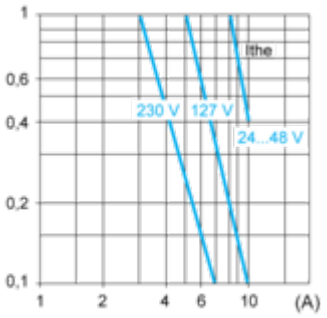


**Ithe** Thermal current
**(A)** Current

#### DC Supply

Operating rate: 3600 operating cycles/hour. Load factor: 0.5.
**Power broken in W for 1 million operating cycles, DC-13 utilization category**

| Voltage | V | 24 | 48 | 120 |
|---|---|---|---|---|
| Inductive circuit | W | 65 | 48 | 40 |