Product data sheet

Specifications

Empty control station without hinges, Harmony XAP, XB2 SL, plastic, grey, undrilled, 151x241x87mm

XAPA3100

Product availability: Non-Stock - Not normally stocked in distribution facility

Price*: 284.00 USD

Main

Range Of Product	Harmony XAP
Product Or Component Type	Empty control station without hinges
Device Short Name	XAPA
Product Front Plate Size	151 x 241 mm
Usable Depth	3.27 in (83 mm)
Number Of Cut-Out	Undrilled
Colour Of Base Of Enclosure	Grey
Colour Of Cover	Grey
Material	Glass reinforced polyester
Cable Entry	Undrilled
Device Mounting	Flush
Ip Degree Of Protection	IP65 IEC 60529 IP69 NF C 20-010 IP69K
Resistance To Chemical Agents	High resistant to acids High resistant to all solvents High resistant to bases High resistant to diesel High resistant to mineral salts High resistant to oils and greases High resistant to petrol High resistant to sea water

Complementary

Net Weight	1.90 lb(US) (0.86 kg)
Flame Retardance	M3 conforming to CSTB VO conforming to UL 94

Environment

Protective Treatment	TH TC
Ambient Air Temperature For Storage	-40…158 °F (-40…70 °C)
Ambient Air Temperature For Operation	-40…158 °F (-40…70 °C)
Overvoltage Category	Class II IEC 60536 Class II NF C 20-030

Price is “List Price” and may be subject to a trade discount – check with your local distributor or retailer for actual price.

Disclaimer: This documentation is not intended as a substitute for and is not to be used for determining suitability or reliability of these products for specific user applications

Fire Resistance	1562 °F (850 °C) NF C 20-455 1760 °F (960 °C) IEC 92

Ordering and shipping details

Category	US10CS222475
Discount Schedule	0CS2
Gtin	3389110313178
Returnability	No
Country Of Origin	FR

Packing Units

Unit Type Of Package 1	PCE
Number Of Units In Package 1	1
Package 1 Height	5.12 in (13 cm)
Package 1 Width	6.54 in (16.6 cm)
Package 1 Length	9.65 in (24.5 cm)
Package 1 Weight	2.28 lb(US) (1.032 kg)
Unit Type Of Package 2	S03
Number Of Units In Package 2	4
Package 2 Height	11.81 in (30 cm)
Package 2 Width	11.81 in (30 cm)
Package 2 Length	15.75 in (40 cm)
Package 2 Weight	10.18 lb(US) (4.616 kg)
Unit Type Of Package 3	P06
Number Of Units In Package 3	32
Package 3 Height	30.31 in (77 cm)
Package 3 Width	31.50 in (80 cm)
Package 3 Length	23.62 in (60 cm)
Package 3 Weight	100.05 lb(US) (45.38 kg)

Contractual warranty

Warranty	18 months

Sustainability

Green Premium™ label is Schneider Electric's commitment to delivering products with best-in-class environmental performance. Green Premium promises compliance with the latest regulations, transparency on environmental impacts, as well as circular and low-CO_2 products.

Guide to assessing product sustainability is a white paper that clarifies global eco-label standards and how to interpret environmental declarations.

Learn more about Green Premium >

Guide to assess a product's sustainability >

Transparency RoHS/REACh

Well-being performance

Reach Free Of Svhc	
Toxic Heavy Metal Free	
Mercury Free	
Rohs Exemption Information	Yes

Certifications & Standards

Reach Regulation	REACh Declaration
Eu Rohs Directive	Pro-active compliance (Product out of EU RoHS legal scope) EU RoHS Declaration
China Rohs Regulation	China RoHS declaration
Environmental Disclosure	Product Environmental Profile
Circularity Profile	No need of specific recycling operations
California Proposition 65	WARNING: This product can expose you to chemicals including: Di-isodecyl phthalate (DIDP), which is known to the State of California to cause birth defects or other reproductive harm. For more information go to www.P65Warnings.ca.gov

Dimensions Drawings

Dimensions and Fixing

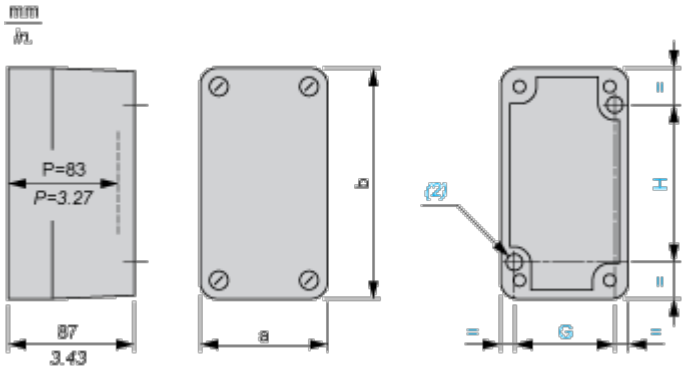

(2) 2 x Ø 5.6 mm/4.94 in. holes, depth 12 mm/0.47 in.

P Usable depth

a		b		G		H	
mm	in.	mm	in.	mm	in.	mm	in.
151	5.94	241	9.49	135	5.31	200	7.87