Product data sheet

Specifications

Hour counter, Harmony XB5, plastic, 22mm, mechanical 5 digit display, 120V AC

XB5DSG

Product availability: Stock - Normally stocked in distribution facility

Price*: 383.00 USD

Main

Range Of Product	Harmony XB5
Bezel Material	Dark grey plastic
Product Or Component Type	Hour counter
Mounting Diameter	0.87 in (22 mm)
Reset	Without

Complementary

[Us] Rated Supply Voltage	120 V +/- 10 %
Display Digits	5
Current Consumption	8 mA
Resistance To High Pressure Washer	1015.26 psi (7000000 Pa) 131 °F (55 °C) 0.1 m
Mounting Mode	Flush-mounted
Mounting Support	Panel mounting
Height	1.18 in (30 mm)
Width	1.18 in (30 mm)
Depth	2.36 in (60 mm)
Device Presentation	Monolithic product
Net Weight	0.10 lb(US) (0.045 kg)

Environment

Protective Treatment	TH
Ambient Air Temperature For Storage	-40…158 °F (-40…70 °C)
Ambient Air Temperature For Operation	-13…158 °F (-25…70 °C)
Electrical Shock Protection Class	Class II IEC 60536
Ip Degree Of Protection	IP65 conforming to IEC 60529
Nema Degree Of Protection	NEMA 13
Standards	IEC 60947-5-1
Product Certifications	CE UL

Price is “List Price” and may be subject to a trade discount – check with your local distributor or retailer for actual price.

Disclaimer: This documentation is not intended as a substitute for and is not to be used for determining suitability or reliability of these products for specific user applications

Ordering and shipping details

Category	US10CS222467
Discount Schedule	0CS2
Gtin	3389110102635
Returnability	Yes
Country Of Origin	DE

Packing Units

Unit Type Of Package 1	PCE
Number Of Units In Package 1	1
Package 1 Height	1.34 in (3.4 cm)
Package 1 Width	2.13 in (5.4 cm)
Package 1 Length	3.39 in (8.6 cm)
Package 1 Weight	1.55 oz (44 g)
Unit Type Of Package 2	BB1
Number Of Units In Package 2	5
Package 2 Height	1.34 in (3.4 cm)
Package 2 Width	3.39 in (8.6 cm)
Package 2 Length	10.43 in (26.5 cm)
Package 2 Weight	7.80 oz (221 g)
Unit Type Of Package 3	S03
Number Of Units In Package 3	100
Package 3 Height	11.81 in (30 cm)
Package 3 Width	11.81 in (30 cm)
Package 3 Length	15.75 in (40 cm)
Package 3 Weight	11.30 lb(US) (5.125 kg)

Contractual warranty

Warranty	18 months

Sustainability

Green Premium™ label is Schneider Electric's commitment to delivering products with best-in-class environmental performance. Green Premium promises compliance with the latest regulations, transparency on environmental impacts, as well as circular and low-CO_2 products.

Guide to assessing product sustainability is a white paper that clarifies global eco-label standards and how to interpret environmental declarations.

Learn more about Green Premium >

Guide to assess a product's sustainability >

Transparency RoHS/REACh

Well-being performance

Reach Free Of Svhc	
Toxic Heavy Metal Free	
Mercury Free	
Rohs Exemption Information	Yes

Certifications & Standards

Reach Regulation	REACh Declaration
Eu Rohs Directive	Pro-active compliance (Product out of EU RoHS legal scope) EU RoHS Declaration
China Rohs Regulation	China RoHS declaration
Environmental Disclosure	Product Environmental Profile
Weee	The product must be disposed on European Union markets following specific waste collection and never end up in rubbish bins.
Circularity Profile	End of Life Information
California Proposition 65	WARNING: This product can expose you to chemicals including: Di-isodecyl phthalate (DIDP), which is known to the State of California to cause birth defects or other reproductive harm. For more information go to www.P65Warnings.ca.gov

Dimensions Drawings

Dimensions

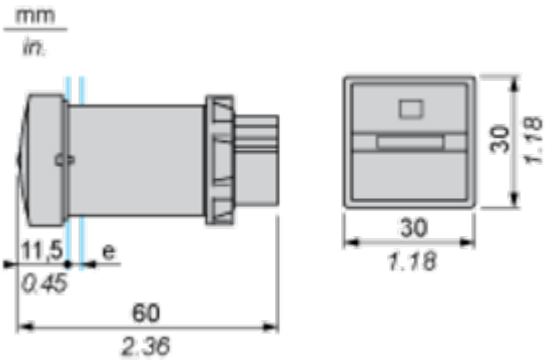

e: panel thickness: 1 to 6 mm / 0.04 to 0.24 in.

Mounting and Clearance

Panel Cut-out for Pushbuttons, Switches and Pilot Lights (Finished Holes, Ready for Installation)

Connection by Screw Clamp Terminals or Plug-in Connectors or on Printed Circuit Board

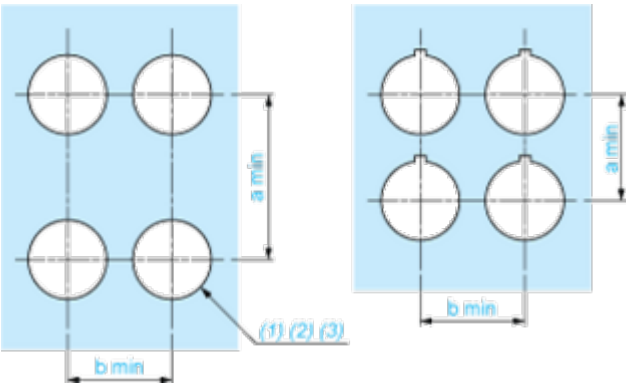

(1) Diameter on finished panel or support
(2) For selector switches and Emergency stop buttons, use of an anti-rotation plate type ZB5AZ902 is recommended.
(3) Ø22.5 mm recommended (Ø22.3 $_{0}^{+0.4}$) / Ø0.89 in. recommended (Ø0.88 in. $_{0}^{+0.016}$)

Connections	a in mm	a in in.	b in mm	b in in.
By screw clamp terminals or plug-in connector	40	1.57	30	1.18
By Faston connectors	45	1.77	32	1.26
On printed circuit board	30	1.18	30	1.18

Detail of Lug Recess

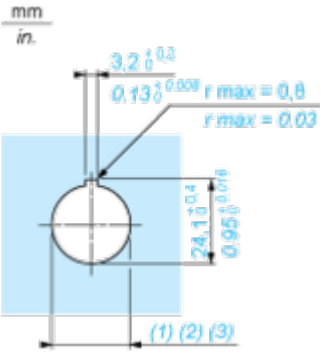

(1) Diameter on finished panel or support
(2) For selector switches and Emergency stop buttons, use of an anti-rotation plate type ZB5AZ902 is recommended.
(3) Ø22.5 mm recommended (Ø22.3 $_{0}^{+0.4}$) / Ø0.89 in. recommended (Ø0.88 in. $_{0}^{+0.016}$)