Product data sheet

Specifications

Green Premium™

Discontinued

Pilot light, Harmony XB7, round Ø22 mm, blue, integral LED, 24 V, faston connectors

XB7EV06BP3

Discontinued on: Dec 2, 2020

End-of-service on: Dec 31, 2020

Main

Range Of Product	Harmony XB7
Product Or Component Type	Pilot light
Device Short Name	XB7
Mounting Diameter	0.87 in (22 mm)
Sale Per Indivisible Quantity	10
Shape Of Signaling Unit Head	Round
Cap/Operator Or Lens Colour	Blue
Operator Additional Information	With plain lens
Light Source	LED
Bulb Base	Integral LED
[Us] Rated Supply Voltage	24 V AC/DC 50/60 Hz
Device Presentation	Monolithic product

Complementary

Height	1.14 in (29 mm)
Width	1.14 in (29 mm)
Depth	2.13 in (54 mm)
Terminals Description Iso N°1	(X1-X2)PL
Net Weight	0.04 lb(US) (0.02 kg)
Device Mounting	Fixing hole 0.89 in (22.5 mm) 22.3 +0.4/0 EN/IEC 60947-5-1
Fixing Center	>= 30 x 40 mm support panel) metal 0.04…0.24 in (1…6 mm) >= 30 x 40 mm support panel) plastic 0.08…0.24 in (2…6 mm)
Fixing Mode	Fixing nut beneath head 17.70…21.24 lbf.in (2…2.4 N.m)
Connections - Terminals	Faston connectors 1 x 6.35 mm EN/IEC 60947-1 Faston connectors 2 x 2.8 mm EN/IEC 60947-1
[Ui] Rated Insulation Voltage	250 V 3)EN/IEC 60947-1
[Uimp] Rated Impulse Withstand Voltage	6 kV EN/IEC 60947-1
Signalling Type	Steady
Supply Voltage Limits	19.2…30 V DC 21.6…26.4 V AC
Current Consumption	20...27 mA

Price is “List Price” and may be subject to a trade discount – check with your local distributor or retailer for actual price.

Disclaimer: This documentation is not intended as a substitute for and is not to be used for determining suitability or reliability of these products for specific user applications

Service Life	70000 h at rated voltage and 25 °C

Environment

Protective Treatment	TH
Ambient Air Temperature For Storage	-40…158 °F (-40…70 °C)
Ambient Air Temperature For Operation	-13…158 °F (-25…70 °C)
Overvoltage Category	Class II IEC 60536
Ip Degree Of Protection	IP20 IEC 60529 rear face) IP65 IEC 60529 front face)
Nema Degree Of Protection	NEMA 4 UL 50 E NEMA 12 UL 50 E
Standards	UL 508 EN/IEC 60947-1 EN/IEC 60947-5-1 JIS C8201-5-1 CSA C22.2 No 14 JIS C8201-1
Vibration Resistance	5 gn 2…500 Hz)IEC 60068-2-6
Shock Resistance	50 gn 11 ms) half sine wave acceleration IEC 60068-2-27
Electromagnetic Compatibility	Disturbing field emission class B conforming to EN 55011

Ordering and shipping details

Category	22464-PUSHBUTTONS, XB7-22MM
Discount Schedule	CS2
Gtin	3389118214514
Returnability	No
Country Of Origin	ID

Packing Units

Unit Type Of Package 1	PCE
Number Of Units In Package 1	1
Package 1 Height	1.57 in (4 cm)
Package 1 Width	6.69 in (17 cm)
Package 1 Length	6.69 in (17 cm)
Package 1 Weight	0.60 oz (17 g)

Contractual warranty

Warranty	18 months

Sustainability

Green Premium™ label is Schneider Electric's commitment to delivering products with best-in-class environmental performance. Green Premium promises compliance with the latest regulations, transparency on environmental impacts, as well as circular and low-CO_2 products.

Guide to assessing product sustainability is a white paper that clarifies global eco-label standards and how to interpret environmental declarations.

Learn more about Green Premium >

Guide to assess a product's sustainability >

Transparency RoHS/REACh

Well-being performance

- Reach Free Of Svhc
- Toxic Heavy Metal Free
- Mercury Free
- Rohs Exemption Information — Yes

Certifications & Standards

Reach Regulation	REACh Declaration
Eu Rohs Directive	Pro-active compliance (Product out of EU RoHS legal scope) EU RoHS Declaration
China Rohs Regulation	China RoHS declaration
Environmental Disclosure	Product Environmental Profile
Weee	The product must be disposed on European Union markets following specific waste collection and never end up in rubbish bins.
Circularity Profile	End of Life Information
California Proposition 65	WARNING: This product can expose you to chemicals including: Lead and lead compounds, which is known to the State of California to cause cancer and birth defects or other reproductive harm. For more information go to www.P65Warnings.ca.gov

Dimensions Drawings

Pilot Light with Faston Terminal

Dimensions

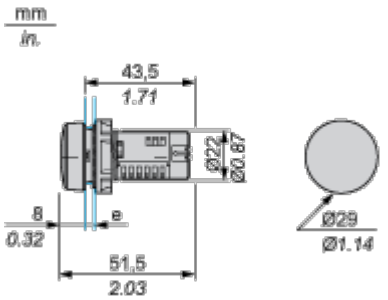

e Support panel thickness: 1 to 6 mm/0.4 to 0.24 in. (metal), 2 to 6 mm/0.8 to 0.24 in. (plastic).

Mounting and Clearance

Mounting

Diameter of Finished Fixing Holes

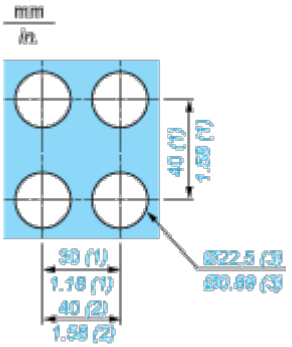

(1) Minimum value.

(2) 40 mm/1.58 in. for Emergency switching off pushbutton only.

(3) Standard value: Ø 22.3 (0; + 0.4) mm/Ø 0.88 (0; + 0.02) in.

Faston Clip Connection

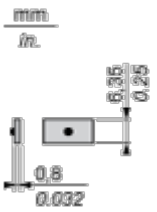

“U” Type Tag Connection

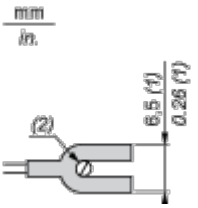

(1) 6.5 mm/0.26 in. recommended, 7 mm/0.28 in. max.

(2) M3 screw clamp terminal.

Connections and Schema

Wiring Diagram

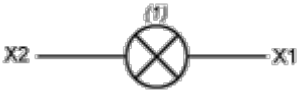

(1) LED