Product data sheet

Specifications

Green Premium™

module XPS-MP - 2 independent functions - 24 V DC

XPSMP11123

Discontinued on: Jun 19, 2023

End-of-service on: Jun 20, 2023

Discontinued - Service only

Product availability: Non-Stock - Not normally stocked in distribution facility

Main

Range Of Product	Preventa Safety automation
Product Or Component Type	Safety controller with pre-defined function
Safety Module Name	XPSMP
Safety Module Application	2 independent functions
Safety Use Category	Category 4 maximum EN/IEC 60954-1
Type Of Start	Automatic or unmonitored 1) Automatic or unmonitored 10) Automatic or unmonitored 11) Automatic or unmonitored 14) Automatic or unmonitored 3) Automatic or unmonitored 5) Automatic or unmonitored 7) Monitored 12) Monitored 13) Monitored 15) Monitored 2) Monitored 4) Monitored 6) Monitored 8) Monitored 9)
Checks	Configuration 10) Configuration 13) Configuration 3) Configuration 4) Configuration 5) Configuration 6) Configuration 9)
Standards	EN/IEC 60947-1 + A11 EN/IEC 60947-5-1 EN/IEC 60204-1 DIN V VDE 801 + A1
Product Certifications	UL CSA BIA
[Us] Rated Supply Voltage	24 V DC - 20...20 %
Connections - Terminals	Captive screw clamp terminals flexible 0.14...0.75 mm² without cable end, 2 wires Captive screw clamp terminals solid 0.14...0.75 mm² without cable end, 2 wires Captive screw clamp terminals flexible 0.14...2.5 mm² without cable end, 1 wire Captive screw clamp terminals solid 0.14...2.5 mm² without cable end, 1 wire Captive screw clamp terminals flexible 0.25...1 mm² with cable end, without bezel, 2 wires Captive screw clamp terminals flexible 0.25...1.5 mm² with cable end, with bezel, 1 wire Captive screw clamp terminals flexible 0.25...2.5 mm² with cable end, without bezel, 1 wire Captive screw clamp terminals flexible 0.5...1.5 mm² with cable end, with double bezel, 2 wires

Price is “List Price” and may be subject to a trade discount – check with your local distributor or retailer for actual price.

Disclaimer: This documentation is not intended as a substitute for and is not to be used for determining suitability or reliability of these products for specific user applications

Safety Level	Can reach PL e/category 4 EN/ISO 13849-1 Can reach SIL 3 EN/IEC 62061

Complementary

Function Of Module	0 functions disabled (factory setting) 1 emergency stop monitoring 1-channel wiring, category 2 10 enabling grip switch monitoring (3-position switch), category 4 11 sensing mat and edges monitoring, category 3 12 sensing mat and edges monitoring, category 3 13 relay output safety light curtain monitoring, category 4 14 coded magnetic switch monitoring, category 4 15 coded magnetic switch monitoring, category 4 2 emergency stop monitoring 1-channel wiring, category 2 3 emergency stop monitoring 2-channel wiring, or guard monitoring, category 4 4 emergency stop monitoring 2-channel wiring, or guard monitoring, category 4 5 emergency stop monitoring 2-channel wiring, or guard monitoring, category 4 6 emergency stop monitoring 2-channel wiring, or guard monitoring, category 4 7 emergency stop monitoring 2-channel wiring, or guard monitoring, category 4 8 emergency stop monitoring 2-channel wiring, or guard monitoring, category 4 9 guard monitoring for injection presses and blowing machines, category 4
Synchronisation Time Between Inputs	0.5 s 13) 1.5 s 14) 1.5 s 15) 1.5 s 5) 1.5 s 6) 1.5 s 9) Unlimited 3) Unlimited 4) Unlimited 7) Unlimited 8)
Power Consumption In W	5 W
Input Protection Type	Internal, electronic
[Uc] Control Circuit Voltage	24 V
Maximum Line Resistance	100 Ohm <6561.68 ft (2000 m)
Number Of Safety Circuits	3 NO relays per function (6 NO total), volt-free
Number Of Additional Circuits	3 solid state outputs
Breaking Capacity	180 VA holding AC-15 C300 relay output 1800 VA inrush AC-15 C300 relay output
Breaking Capacity	20 mA 24 V static output circuit 1.5 A 24 V DC-13)50 ms relay output
Output Thermal Current	2 A for 1 output and 4 A for the other 2 outputs relay 3.3 A for all 3 outputs relay simultaneously 6 A for 1 output and 2 A for the other 2 outputs relay
[Ith] Conventional Free Air Thermal Current	20 A
Associated Fuse Rating	4 A gG relay output EN/IEC 60947-5-1, DIN VDE 0660 part 200 6 A fast blow relay output EN/IEC 60947-5-1, DIN VDE 0660 part 200
Minimum Output Current	10 mA relay output
Minimum Output Voltage	17 V relay output
Maximum Response Time On Input Open	30 ms
[Ui] Rated Insulation Voltage	300 V 2)EN/IEC 60947-5-1, DIN VDE 0110 parts 1 & 2
[Uimp] Rated Impulse Withstand Voltage	4 kV III EN/IEC 60947-5-1, DIN VDE 0110 parts 1 & 2
Local Signalling	12 LEDs
Mounting Support	35 mm symmetrical DIN rail
Depth	4.49 in (114 mm)
Height	3.90 in (99 mm)

Width	1.77 in (45 mm)
Net Weight	0.71 lb(US) (0.32 kg)

Environment

Ip Degree Of Protection	IP20 terminals) IP40 enclosure)
Ambient Air Temperature For Operation	14…131 °F (-10…55 °C)
Ambient Air Temperature For Storage	-13…185 °F (-25…85 °C)

Ordering and shipping details

Category	US1SAF222477
Discount Schedule	SAF2
Gtin	3389110842326
Returnability	No
Country Of Origin	FR

Packing Units

Unit Type Of Package 1	PCE
Number Of Units In Package 1	1
Package 1 Height	2.56 in (6.5 cm)
Package 1 Width	4.72 in (12 cm)
Package 1 Length	6.30 in (16 cm)
Package 1 Weight	15.94 oz (452 g)
Unit Type Of Package 2	S03
Number Of Units In Package 2	20
Package 2 Height	11.81 in (30 cm)
Package 2 Width	11.81 in (30 cm)
Package 2 Length	15.75 in (40 cm)
Package 2 Weight	21.52 lb(US) (9.762 kg)

Contractual warranty

Warranty	18 months

Sustainability

Green Premium™ label is Schneider Electric's commitment to delivering products with best-in-class environmental performance. Green Premium promises compliance with the latest regulations, transparency on environmental impacts, as well as circular and low-CO_2 products.

Guide to assessing product sustainability is a white paper that clarifies global eco-label standards and how to interpret environmental declarations.

Learn more about Green Premium >

Guide to assess a product's sustainability >

Transparency RoHS/REACh

Well-being performance

Mercury Free	
Rohs Exemption Information	Yes
Pvc Free	

Certifications & Standards

Reach Regulation	REACh Declaration
Eu Rohs Directive	Pro-active compliance (Product out of EU RoHS legal scope)
China Rohs Regulation	China RoHS declaration
Environmental Disclosure	Product Environmental Profile
Weee	The product must be disposed on European Union markets following specific waste collection and never end up in rubbish bins.
Circularity Profile	End of Life Information
California Proposition 65	WARNING: This product can expose you to chemicals including: Lead and lead compounds, which is known to the State of California to cause cancer and birth defects or other reproductive harm. For more information go to www.P65Warnings.ca.gov

Dimensions Drawings

Dimensions

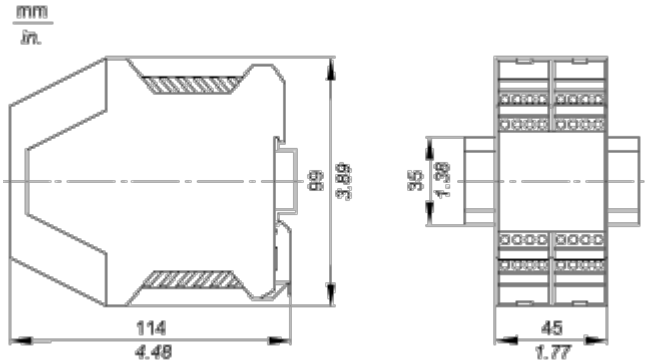

Connections and Schema

Wiring Diagrams

Refer to the Instruction Sheet

To download the instruction sheet, follow below procedure:

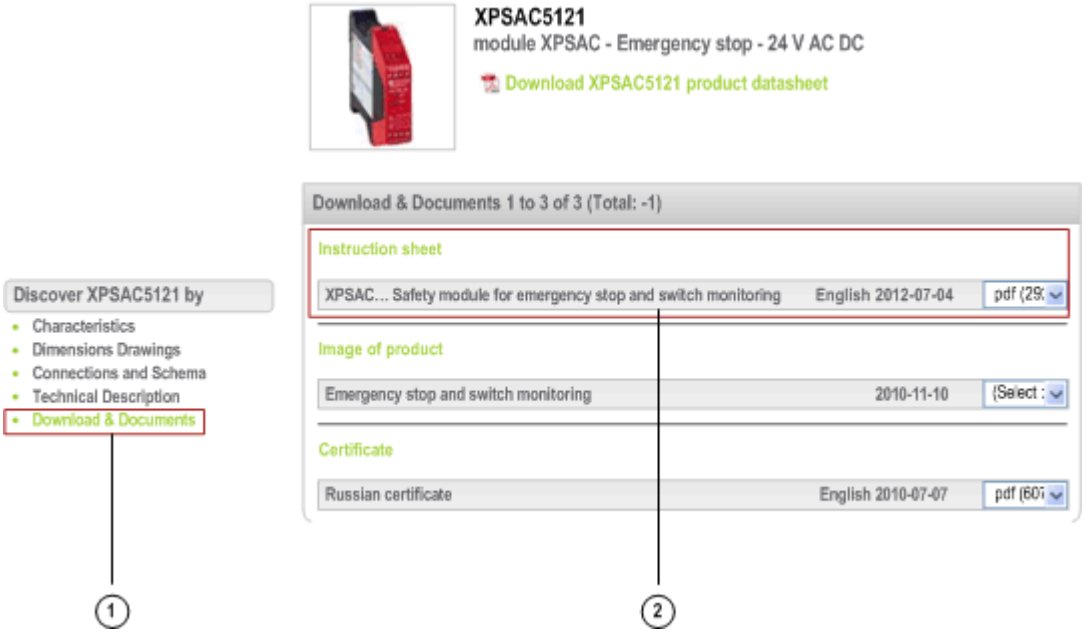

1 Click on **Download & Documents.**

2 Click on **Instruction sheet.**

Technical Description

Safety Functions

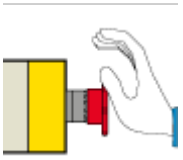	• Emergency stop monitoring, 1 channel wiring:
	  ◦ 1 channel Emergency stop, automatic or unmonitored start.
	  ◦ 1 channel Emergency stop, monitored start.
	• Emergency stop monitoring, 2 channel wiring:
	  ◦ 2 channel Emergency stop, automatic or unmonitored start.
	  ◦ 2 channel Emergency stop, monitored start.

	• Coded magnetic switch monitoring:
	  ◦ Automatic or unmonitored start, synchronization time = 1,5 s.
	  ◦ Monitored start, synchronization time = 1,5 s.

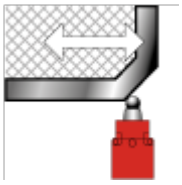	• Guard monitoring with start test:
	  ◦ Locking of guard with start test, automatic or unmonitored start.
	  ◦ Locking of guard with start test, monitored start.
	• Guard monitoring with start test and synchronization time = 1,5 ms:
	  ◦ Locking of guard with start test, automatic or unmonitored start.
	  ◦ Locking of guard with start test, monitored start.
	• Guard monitoring for injection press or blowing machine.

	• Enabling switch monitoring, safety mat monitoring:
	  ◦ Enabling switch monitoring, with or without start-up preparation.
	  ◦ Safety mat monitoring, automatic or unmonitored start.

	• Sensing mat monitoring, monitored start.

	• Light curtain monitoring, monitored start, synchronization time = 0,5 s.