# Product data sheet

Specifications

## USB configurable monolithic tower light, Harmony XVGU, multi color programmable lights 60mm, steady/flashing LED buzzer

XVGU3SWV

**Product availability: Stock - Normally stocked in distribution facility**

**Price*: 105.00 USD**

## Main

| | |
|---|---|
| **Range Of Product** | Harmony XVGU |
| **Product Or Component Type** | USB configurable monolithic tower light |
| **Beacon Or Indicator Bank Unit Type** | 3 illuminated units |
| **Sound Signalling** | Buzzer |
| **Mounting Diameter** | 2.36 in (60 mm) |
| **Component Name** | XVGU |
| **Light Source** | LED steady or flashing multi-colour |
| **Indicator Bank Base Type** | Base with integrated buzzer |
| **Noise Level** | 82 dB 2 tone buzzer)1 m |

## Complementary

| | |
|---|---|
| **Material** | PC: globe |
| **Device Mounting** | Direct mounting |
| **Light Block Color** | Clear/clear/clear |
| **[Us] Rated Supply Voltage** | 5 V DC |
| **Connector Type** | USB type A female |
| **Current Consumption** | 400 mA |
| **Sound Frequency** | 2700 Hz<br>3800 Hz |
| **Power Consumption In W** | 2 W |
| **Flashing Frequency** | 2 Hz flashing LED unit<br>1 Hz flashing LED unit |
| **Product Compatibility** | Vijeo Designer 4.6 indoor use only<br>HMIGTO<br>XBTGT....<br>XBTGK....<br>XBTGC1.<br>XBTGC2.<br>XBTGH |
| **Net Weight** | 0.66 lb(US) (0.3 kg) |

## Environment

Price is “List Price” and may be subject to a trade discount – check with your local distributor or retailer for actual price.

Disclaimer: This documentation is not intended as a substitute for and is not to be used for determining suitability or reliability of these products for specific user applications

| | |
|---|---|
| **Standards** | IEC 61000-6-2<br>IEC 61000-6-4 |
| **Product Certifications** | GOST<br>cUL<br>CE<br>RCM<br>UL 508 |
| **Ambient Air Temperature For Storage** | -31…158 °F (-35…70 °C) |
| **Ambient Air Temperature For Operation** | 32…131 °F (0…55 °C) |
| **Electrical Shock Protection Class** | Class I |
| **Ip Degree Of Protection** | IP54 |

## Ordering and shipping details

| | |
|---|---|
| **Category** | US100XV22618 |
| **Discount Schedule** | 00XV |
| **Gtin** | 3606480530944 |
| **Returnability** | No |
| **Country Of Origin** | ID |

## Packing Units

| | |
|---|---|
| **Unit Type Of Package 1** | PCE |
| **Number Of Units In Package 1** | 1 |
| **Package 1 Height** | 3.11 in (7.9 cm) |
| **Package 1 Width** | 3.11 in (7.9 cm) |
| **Package 1 Length** | 12.24 in (31.1 cm) |
| **Package 1 Weight** | 12.35 oz (350.0 g) |
| **Unit Type Of Package 2** | S04 |
| **Number Of Units In Package 2** | 21 |
| **Package 2 Height** | 11.81 in (30 cm) |
| **Package 2 Width** | 15.75 in (40 cm) |
| **Package 2 Length** | 23.62 in (60 cm) |
| **Package 2 Weight** | 18.96 lb(US) (8.6 kg) |
| **Unit Type Of Package 3** | P06 |
| **Number Of Units In Package 3** | 84 |
| **Package 3 Height** | 31.50 in (80 cm) |
| **Package 3 Width** | 31.50 in (80 cm) |
| **Package 3 Length** | 23.62 in (60 cm) |
| **Package 3 Weight** | 94.60 lb(US) (42.908 kg) |

## Contractual warranty

| | |
|---|---|
| **Warranty** | 18 months |

## Sustainability

**Green Premium™ label** is Schneider Electric's commitment to delivering products with best-in-class environmental performance. Green Premium promises compliance with the latest regulations, transparency on environmental impacts, as well as circular and low-$CO_2$ products.

**Guide to assessing product sustainability** is a white paper that clarifies global eco-label standards and how to interpret environmental declarations.

Learn more about Green Premium >

Guide to assess a product's sustainability >

Transparency RoHS/REACh

## Well-being performance

Mercury Free

| | |
|---|---|
| Rohs Exemption Information | Yes |

## Certifications & Standards

| | |
|---|---|
| **Reach Regulation** | REACh Declaration |
| **Eu Rohs Directive** | Pro-active compliance (Product out of EU RoHS legal scope) |
| **China Rohs Regulation** | China RoHS declaration |
| **Environmental Disclosure** | Product Environmental Profile |
| **Weee** | The product must be disposed on European Union markets following specific waste collection and never end up in rubbish bins. |
| **Circularity Profile** | No need of specific recycling operations |
| **California Proposition 65** | WARNING: This product can expose you to chemicals including: Lead and lead compounds, which is known to the State of California to cause cancer and birth defects or other reproductive harm. For more information go to www.P65Warnings.ca.gov |

Dimensions Drawings

## Dimensions

### Direct Base Mounting

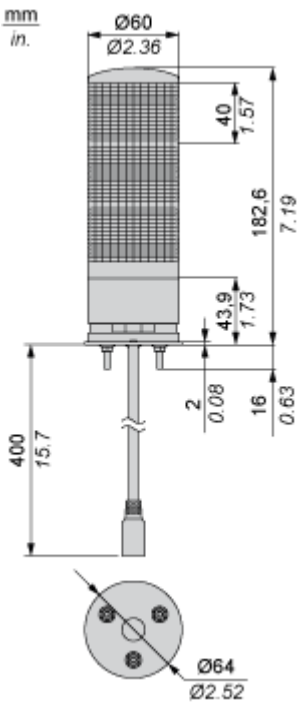

## Mounting and Clearance

### Mounting on Horizontal Support for Direct Base Mounting

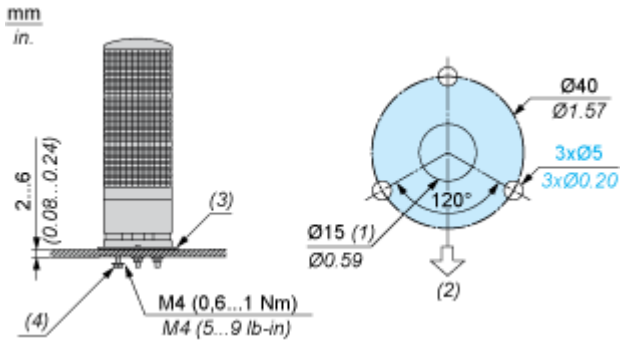


(1) Cable outlet

(2) Buzzer opening position

(3) Waterproof rubber seal

(4) Hexagon nut with flange

## Mounting Orientation

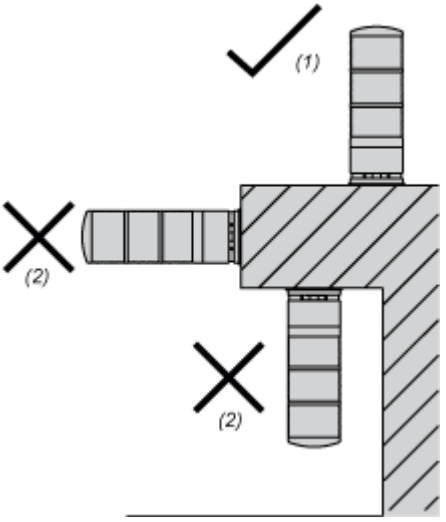


Choose a flat surface with enough strength and with little vibration for installation.Mount this product according to the figure to maintain IP characteristics

(1) OK

(2) NO