Product data sheet

Specifications

Head for illuminated push button, Harmony XB4, metal, orange flush, 22mm, universal LED, spring return, plan lens

ZB4BW353

Product availability: Stock - Normally stocked in distribution facility
Important message: Viktig information: en förändring i utseendet kan observeras på produkten, men detta påverkar inte dess användning i termer av funktion och säkerhet. Detta gör den kompatibel med våra Universal LED-block

Price*: 18.60 USD

Main

Range Of Product	Harmony XB4
Product Or Component Type	Head for illuminated push-button
Device Short Name	ZB4
Product Compatibility	Universal LED
Bezel Material	Chromium plated metal
Head Type	Standard
Mounting Diameter	0.89 in (22.5 mm)
Sale Per Indivisible Quantity	1
Shape Of Signaling Unit Head	Round
Type Of Operator	spring return
Operator Profile	Orange flush, unmarked
Operator Additional Information	With plain lens
Cap/Operator Or Lens Colour	Orange

Complementary

Cad Overall Width	1.14 in (29 mm)
Cad Overall Height	1.14 in (29 mm)
Cad Overall Depth	1.18 in (30 mm)
Net Weight	0.06 lb(US) (0.026 kg)
Resistance To High Pressure Washer	1015.26 psi (7000000 Pa) 131 °F (55 °C) 0.1 m
Mechanical Durability	10000000 cycles
Electrical Composition Code	M1 6 single front mounting integral LED M2 6 single and double front mounting integral LED M6 2 single front mounting integral LED and transformer M10 2 single front mounting integral LED
Device Presentation	Basic sub-assemblies

Environment

Price is “List Price” and may be subject to a trade discount – check with your local distributor or retailer for actual price.

Disclaimer: This documentation is not intended as a substitute for and is not to be used for determining suitability or reliability of these products for specific user applications

Protective Treatment	TH
Ambient Air Temperature For Storage	-40…158 °F (-40…70 °C)
Ambient Air Temperature For Operation	-40…158 °F (-40…70 °C)
Overvoltage Category	Class I IEC 60536
Ip Degree Of Protection	IP66 IEC 60529 IP67 IP69 IP69K
Nema Degree Of Protection	NEMA 13 NEMA 4X
Ik Degree Of Protection	IK06 conforming to IEC 62262
Standards	UL 508 IEC 60947-5-5 JIS C8201-5-1 IEC 60947-1 IEC 60947-5-4 IEC 60947-5-1 CSA C22.2 No 14 JIS C8201-1
Product Certifications	GL UL Listed DNV LROS (Lloyds register of shipping) CSA BV
Vibration Resistance	5 gn 2…500 Hz)IEC 60068-2-6
Shock Resistance	30 gn 18 ms) half sine wave acceleration IEC 60068-2-27 50 gn 11 ms) half sine wave acceleration IEC 60068-2-27

Ordering and shipping details

Category	US10CS222468
Discount Schedule	0CS2
Gtin	3389110889826
Returnability	Yes
Country Of Origin	US

Packing Units

Unit Type Of Package 1	PCE
Number Of Units In Package 1	1
Package 1 Height	1.77 in (4.500 cm)
Package 1 Width	1.34 in (3.400 cm)
Package 1 Length	2.13 in (5.400 cm)
Package 1 Weight	0.92 oz (26.000 g)
Unit Type Of Package 2	BB1
Number Of Units In Package 2	5
Package 2 Height	1.77 in (4.500 cm)
Package 2 Width	1.34 in (3.400 cm)
Package 2 Length	10.43 in (26.500 cm)
Package 2 Weight	4.66 oz (132.000 g)

Unit Type Of Package 3	S03
Number Of Units In Package 3	300
Package 3 Height	11.81 in (30.000 cm)
Package 3 Width	11.81 in (30.000 cm)
Package 3 Length	15.75 in (40.000 cm)
Package 3 Weight	18.77 lb(US) (8.512 kg)

Contractual warranty

Warranty	18 months

Sustainability

Green Premium™ label is Schneider Electric's commitment to delivering products with best-in-class environmental performance. Green Premium promises compliance with the latest regulations, transparency on environmental impacts, as well as circular and low-CO_2 products.

Guide to assessing product sustainability is a white paper that clarifies global eco-label standards and how to interpret environmental declarations.

Learn more about Green Premium >

Guide to assess a product's sustainability >

Transparency RoHS/REACh

Well-being performance

Reach Free Of Svhc	
Toxic Heavy Metal Free	
Mercury Free	
Rohs Exemption Information	Yes

Certifications & Standards

Reach Regulation	REACh Declaration
Eu Rohs Directive	Pro-active compliance (Product out of EU RoHS legal scope) EU RoHS Declaration
China Rohs Regulation	China RoHS declaration
Environmental Disclosure	Product Environmental Profile
Circularity Profile	End of Life Information

Dimensions Drawings

Dimensions

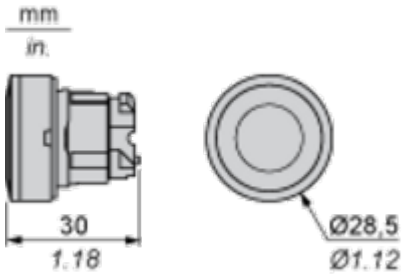

Mounting and Clearance

Panel Cut-out for Pushbuttons, Switches and Pilot Lights (Finished Holes, Ready for Installation)

Connection by Screw Clamp Terminals or Plug-in Connectors or on Printed Circuit Board	Connection by Faston Connectors
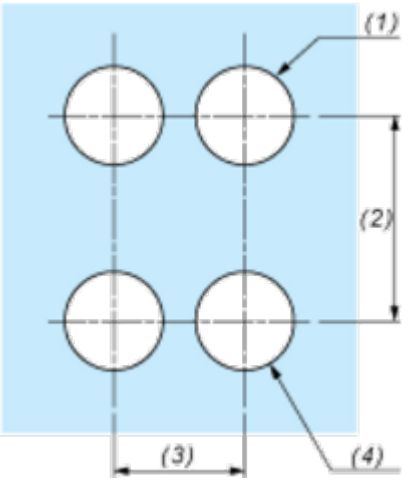	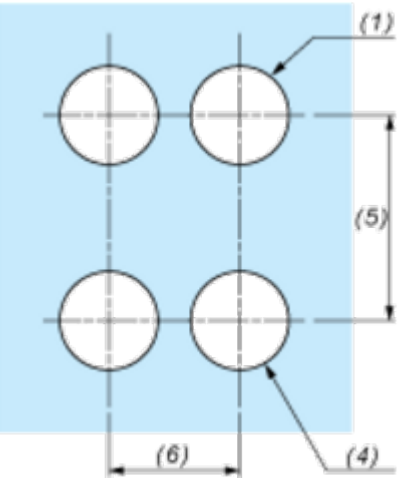

(1) Diameter on finished panel or support
(2) 40 mm min. / 1.57 in. min.
(3) 30 mm min. / 1.18 in. min.
(4) Ø 22.5 mm / 0.89 in. recommended (Ø 22.3 mm $_{0}^{+0.4}$ / 0.88 in. $_{0}^{+0.016}$)
(5) 45 mm min. / 1.78 in. min.
(6) 32 mm min. / 1.26 in. min.

Pushbuttons, Switches and Pilot Lights for Printed Circuit Board Connection

Panel Cut-outs (Viewed from Installer's Side)

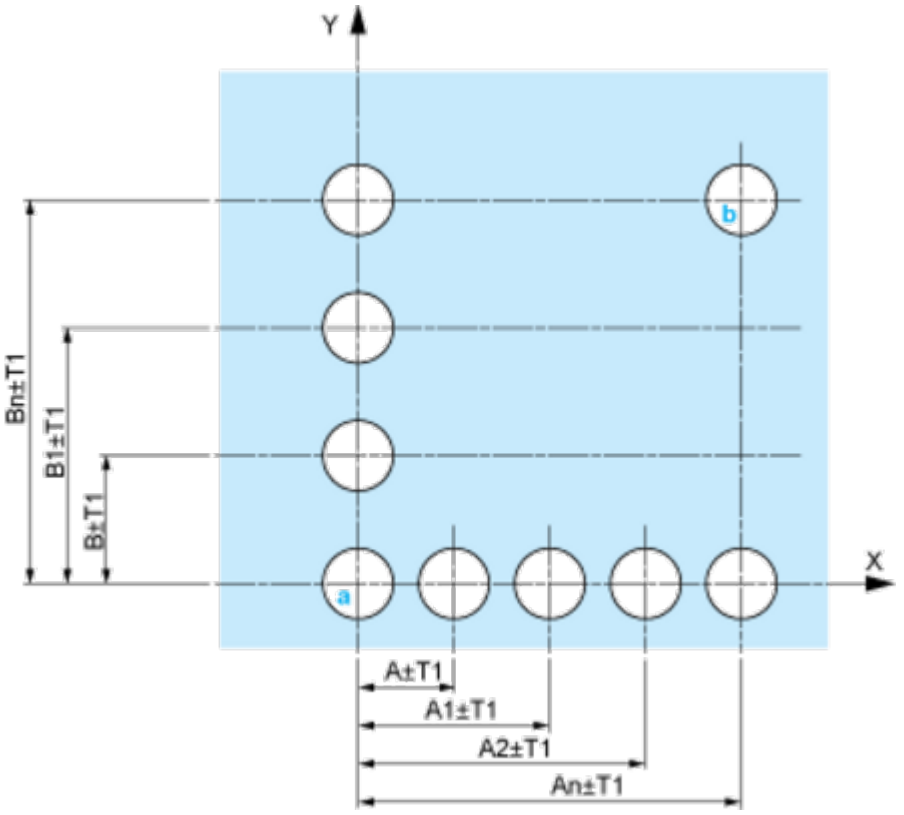

A: 30 mm min. / 1.18 in. min.
B: 40 mm min. / 1.57 in. min.

Printed Circuit Board Cut-outs (Viewed from Electrical Block Side)

Dimensions in mm

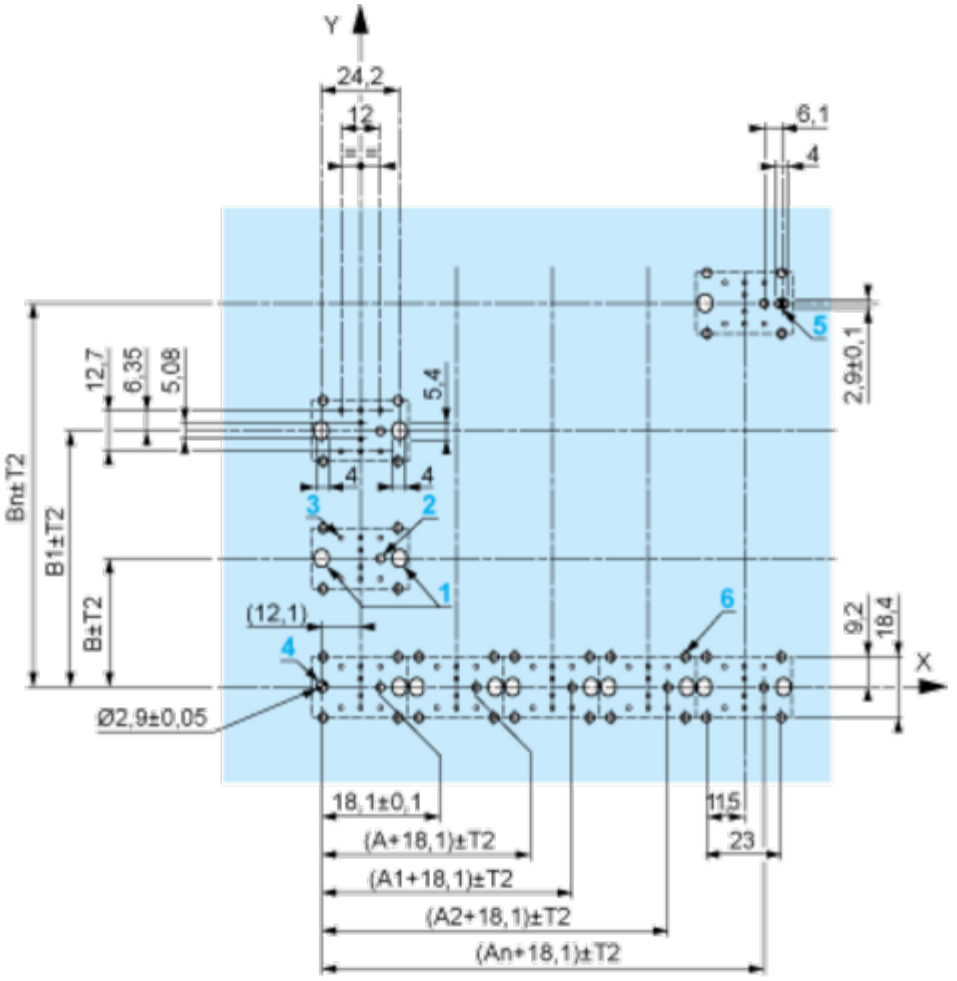

A: 30 mm min.
B: 40 mm min.
Dimensions in in.

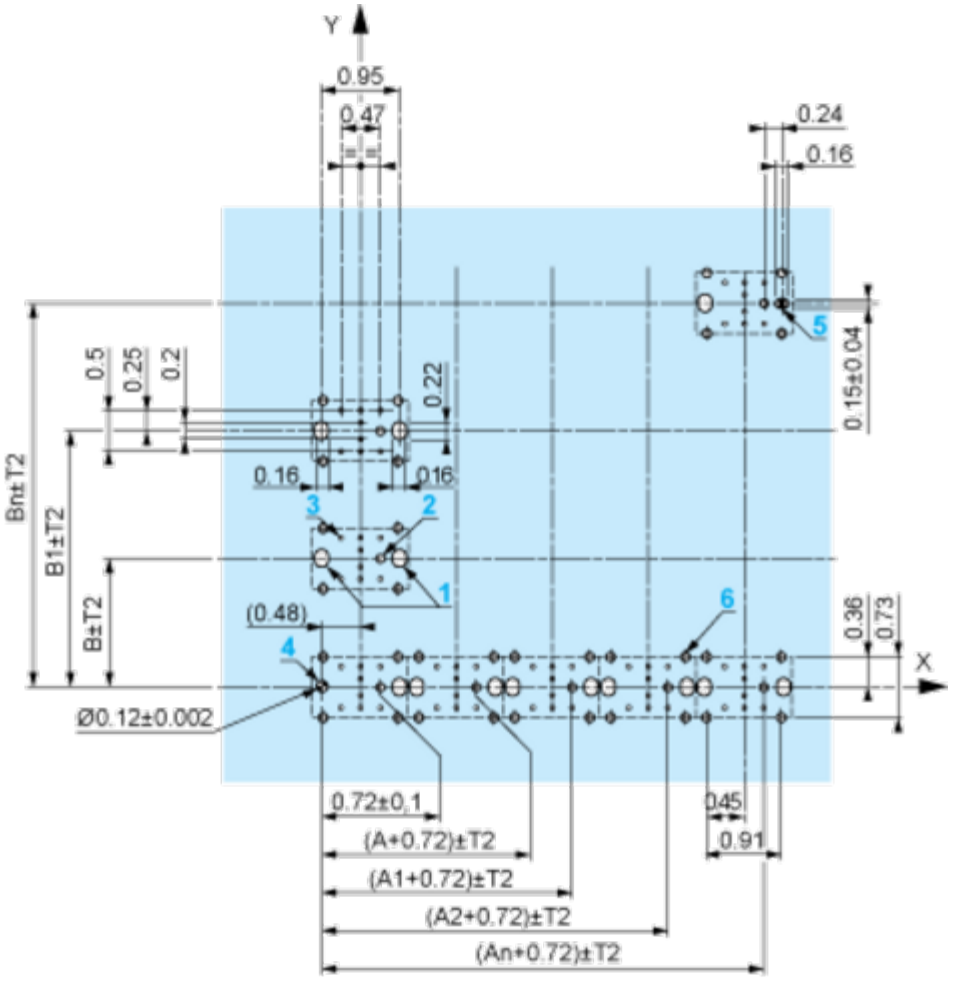

A: 1.18 in. min.
B: 1.57 in. min.

General Tolerances of the Panel and Printed Circuit Board

The cumulative tolerance must not exceed 0.3 mm / 0.012 in: T1 + T2 = 0.3 mm max.

Installation Precautions

- Minimum thickness of circuit board: 1.6 mm / 0.06 in.
- Cut-out diameter: 22.4 mm ± 0.1 / 0.88 in. ± 0.004
- Orientation of body/fixing collar ZB4 BZ009: ± 2°30' (excluding cut-outs marked **a** and **b**).
- Tightening torque of screws ZBZ 006: 0.6 N.m (5.3 lbf.in) max.
- Allow for one ZB4 BZ079 fixing collar/pillar and its fixing screws:
  - every 90 mm / 3.54 in. horizontally (X), and 120 mm / 4.72 in. vertically (Y).
  - with each selector switch head (ZB4 BD•, ZB4 BJ•, ZB4 BG•).

The fixing centers marked **a** and **b** are diagonally opposed and must align with those marked **4** and **5**.

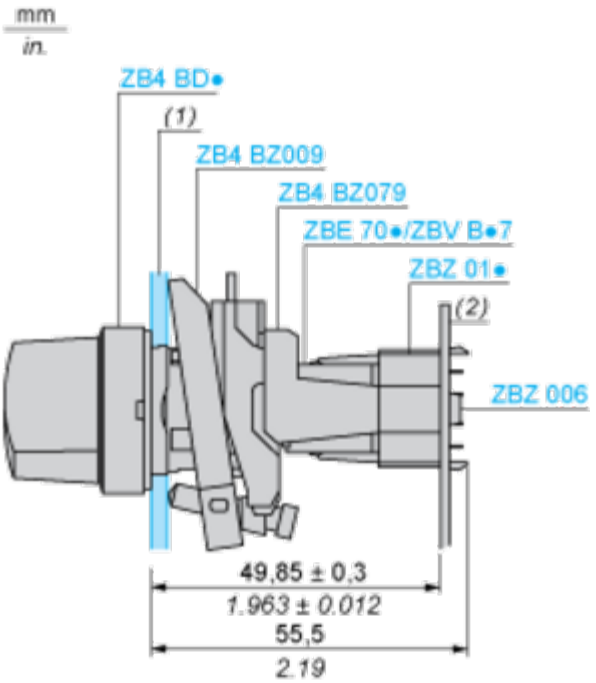

(1) Panel
(2) Printed circuit board

Mounting of Adapter (Socket) ZBZ 01•

- **1** 2 elongated holes for ZBZ 006 screw access
- **2** 1 hole Ø 2.4 mm ± 0.05 / 0.09 in. ± 0.002 for centring adapter ZBZ 01•
- **3** 8 × Ø 1.2 mm / 0.05 in. holes
- **4** 1 hole Ø 2.9 mm ± 0.05 / 0.11 in. ± 0.002, for aligning the printed circuit board (with cut-out marked **a**)
- **5** 1 elongated hole for aligning the printed circuit board (with cut-out marked **b**)
- **6** 4 holes Ø 2.4 mm / 0.09 in. for clipping in adapter ZBZ 01•

Dimensions An + 18.1 relate to the Ø 2.4 mm ± 0.05 / 0.09 in. ± 0.002 holes for centring adapter ZBZ 01•.

Technical Description

Electrical Composition Corresponding to Codes M1 and M7

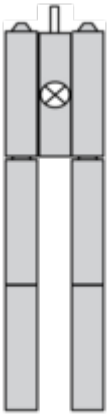

Electrical Composition Corresponding to Codes M2 and M8

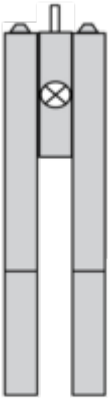

Electrical Composition Corresponding to Codes M6 and P2

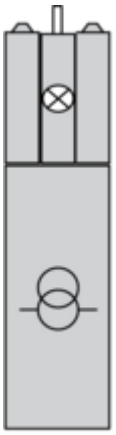

Electrical Composition Corresponding to Codes M5, M10, MF1, MR1 and MF2

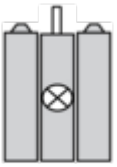

Legend

Single contact

Double contact

Light block

Possible location