Product data sheet

Specifications

Green Premium™

Light block with body fixing collar, Harmony XB5, plastic, red, integral LED, 110…120V AC

ZB5AVG4

Discontinued on: Jan 9, 2023

Discontinued

Product availability: Non-Stock - Not normally stocked in distribution facility

Main

Range Of Product	Harmony XB5
Product Or Component Type	Complete body/light block assembly
Device Short Name	ZB5
Fixing Collar Material	Plastic
Sale Per Indivisible Quantity	1
Connections - Terminals	Screw clamp terminals, <= 2 x 1.5 mm² with cable end EN 60947-1 Screw clamp terminals, >= 1 x 0.22 mm² without cable end EN 60947-1
Light Source	Protected LED
Bulb Base	Integral LED
Light Source Colour	Red

Complementary

Cad Overall Width	1.18 in (30 mm)
Cad Overall Height	1.65 in (42 mm)
Cad Overall Depth	1.26 in (32 mm)
Terminals Description Iso N°1	(X1-X2)PL
Net Weight	0.05 lb(US) (0.022 kg)
Tightening Torque	7.08…10.62 lbf.in (0.8…1.2 N.m) EN 60947-1
Shape Of Screw Head	Cross Philips no 1 Cross pozidriv No 1 Slotted flat Ø 4 mm Slotted flat Ø 5.5 mm
[Ui] Rated Insulation Voltage	600 V 3)EN 60947-1
[Uimp] Rated Impulse Withstand Voltage	6 kV EN 60947-1
Signalling Type	Steady
[Us] Rated Supply Voltage	110...120 V AC 50/60 Hz
Current Consumption	14 mA
Service Life	100000 h at rated voltage and 25 °C
Surge Withstand	1 kV IEC 61000-4-5
Device Presentation	Basic sub-assemblies

Environment

Price is “List Price” and may be subject to a trade discount – check with your local distributor or retailer for actual price.

Disclaimer: This documentation is not intended as a substitute for and is not to be used for determining suitability or reliability of these products for specific user applications

Protective Treatment	TH
Ambient Air Temperature For Storage	-40…158 °F (-40…70 °C)
Ambient Air Temperature For Operation	-40…158 °F (-40…70 °C)
Electrical Shock Protection Class	Class II IEC 60536
Standards	UL 508 EN/IEC 60947-5-1 CSA C22.2 No 14 EN/IEC 60947-1 EN/IEC 60947-5-4 JIS C8201-5-1 JIS C8201-1
Product Certifications	GL LROS (Lloyds register of shipping) UL Listed DNV CSA BV
Vibration Resistance	5 gn 2…500 Hz)IEC 60068-2-6
Shock Resistance	30 gn 18 ms) half sine wave acceleration IEC 60068-2-27 50 gn 11 ms) half sine wave acceleration IEC 60068-2-27
Resistance To Fast Transients	2 kV IEC 61000-4-4
Resistance To Electromagnetic Fields	9.14 V/m (10 V/m) IEC 61000-4-3
Resistance To Electrostatic Discharge	6 kV on contact (on metal parts) IEC 61000-2-6 8 kV in free air (in insulating parts) IEC 61000-2-6
Electromagnetic Emission	Class B IEC 55011

Ordering and shipping details

Category	US10CS222469
Discount Schedule	0CS2
Gtin	3389110907896
Returnability	No
Country Of Origin	FR

Packing Units

Unit Type Of Package 1	PCE
Number Of Units In Package 1	1
Package 1 Height	1.38 in (3.5 cm)
Package 1 Width	2.17 in (5.5 cm)
Package 1 Length	2.40 in (6.1 cm)
Package 1 Weight	0.71 oz (20 g)
Unit Type Of Package 2	BB1
Number Of Units In Package 2	5
Package 2 Height	2.20 in (5.6 cm)
Package 2 Width	10.43 in (26.5 cm)
Package 2 Length	1.34 in (3.4 cm)
Package 2 Weight	3.88 oz (110 g)
Unit Type Of Package 3	S02

Number Of Units In Package 3	50
Package 3 Height	5.91 in (15 cm)
Package 3 Width	11.81 in (30 cm)
Package 3 Length	15.75 in (40 cm)
Package 3 Weight	2.95 lb(US) (1.337 kg)

Contractual warranty

Warranty	18 months

Sustainability

Green Premium™ label is Schneider Electric's commitment to delivering products with best-in-class environmental performance. Green Premium promises compliance with the latest regulations, transparency on environmental impacts, as well as circular and low-CO_2 products.

Guide to assessing product sustainability is a white paper that clarifies global eco-label standards and how to interpret environmental declarations.

Learn more about Green Premium >

Guide to assess a product's sustainability >

Transparency RoHS/REACh

Well-being performance

Mercury Free

Rohs Exemption Information	Yes

Certifications & Standards

Reach Regulation	REACh Declaration
Eu Rohs Directive	Pro-active compliance (Product out of EU RoHS legal scope)
China Rohs Regulation	China RoHS declaration
Environmental Disclosure	Product Environmental Profile
Weee	The product must be disposed on European Union markets following specific waste collection and never end up in rubbish bins.
Circularity Profile	End of Life Information
California Proposition 65	WARNING: This product can expose you to chemicals including: Lead and lead compounds, which is known to the State of California to cause cancer and birth defects or other reproductive harm. For more information go to www.P65Warnings.ca.gov

Dimensions Drawings

Dimensions

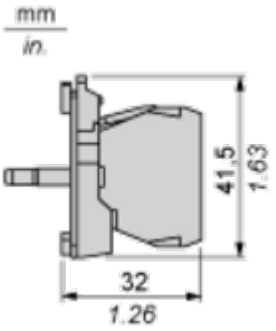

Mounting and Clearance

Panel Cut-out for Pushbuttons, Switches and Pilot Lights (Finished Holes, Ready for Installation)

Connection by Screw Clamp Terminals or Plug-in Connectors or on Printed Circuit Board

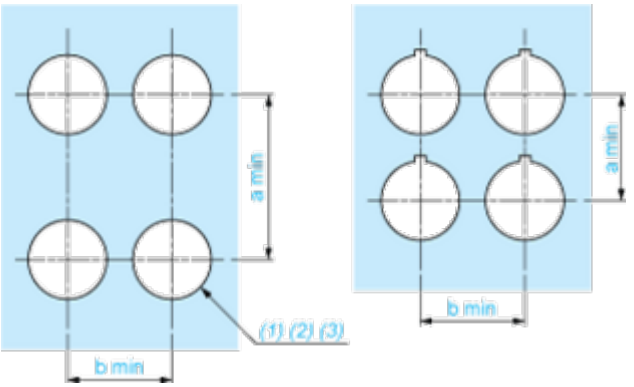

(1) Diameter on finished panel or support
(2) For selector switches and Emergency stop buttons, use of an anti-rotation plate type ZB5AZ902 is recommended.
(3) Ø22.5 mm recommended (Ø22.3 $_{0}^{+0.4}$) / Ø0.89 in. recommended (Ø0.88 in. $_{0}^{+0.016}$)

Connections	a in mm	a in in.	b in mm	b in in.
By screw clamp terminals or plug-in connector	40	1.57	30	1.18
By Faston connectors	45	1.77	32	1.26
On printed circuit board	30	1.18	30	1.18

Detail of Lug Recess

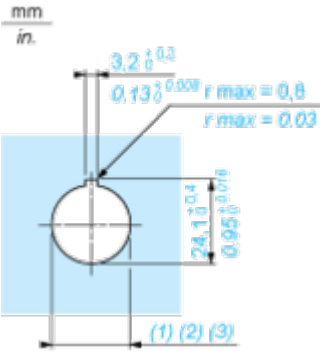

(1) Diameter on finished panel or support
(2) For selector switches and Emergency stop buttons, use of an anti-rotation plate type ZB5AZ902 is recommended.
(3) Ø22.5 mm recommended (Ø22.3 $_{0}^{+0.4}$) / Ø0.89 in. recommended (Ø0.88 in. $_{0}^{+0.016}$)