Product data sheet

Specifications

Wireless and batteryless transmitter,transmitter, Harmony XB5R, mushroom head 40mm, plastic, black, 22mm, spring return

ZB5RTC2

Product availability: Stock - Normally stocked in distribution facility

Price*: 140.80 USD

Main

Range Of Product	Harmony XB5
Product Or Component Type	Wireless and batteryless transmitter
Device Short Name	XB5R
Bezel Material	Dark grey plastic
Fixing Collar Material	Plastic
Mounting Diameter	1.57 in (40 mm)
Transmission Frequency	2405 MHz
Emission Class	5M00G7W
Antenna Type	Omnidirectional

Complementary

Shape Of Signaling Unit Head	Round
Type Of Operator	spring return push-button with transmitter
Max Power Consumption In W	1 mW
Number Of Channels	16
Modulation Technique	O-QPSK
Bandwidth	5 MHz
Antenna Gain	0 dBi
Embedding Depth	1.69 in (43 mm)
Cad Overall Height	1.68 in (42.75 mm)
Cad Overall Width	1.09 in (27.8 mm)
Cad Overall Depth	1.13 in (28.8 mm)
Operating Travel	0.17 in (4.3 mm) total travel)
Operating Force	10 N C/O changing electrical state
Mechanical Robustness	Free fall resistance 1000 mm EN/IEC 60068-2-32
Standards	CSA C22.2 No 14 EN/IEC 60947-1 EN/IEC 60947-5-1 UL 508

Price is “List Price” and may be subject to a trade discount – check with your local distributor or retailer for actual price.

Disclaimer: This documentation is not intended as a substitute for and is not to be used for determining suitability or reliability of these products for specific user applications

Radio Agreement	ANATEL ARIB T66 FCC ICASA RSS
Communication Port Protocol	Zigbee green power 2.4 GHz IEEE 802.15.4
Maximum Sensing Distance	328.08 ft (100 m) in free field 82.02 ft (25 m) transmitter in a plastic box type XAL D and receiver in a metal enclosure 984.25 ft (300 m) transmitter in box type XAL D, receiver in metal enclosure and use relay-antenna
Acquisition Time	2 ms
Response Time	< 2 ms
Emission Power	3 mW
Fixing Mode	Fixing nut beneath head 17.70…21.24 lbf.in (2…2.4 N.m)
Device Composition	ZB5RZC2 ZBRT1

Environment

Ambient Air Temperature For Storage	-40…158 °F (-40…70 °C)
Ambient Air Temperature For Operation	-40…158 °F (-40…70 °C)
Relative Humidity	95 % -40…158 °F (-40…70 °C) without condensation
Ip Degree Of Protection	IP66 IEC 60529 front face) IP67 IEC 60529 front face) IP69 IEC 60529 front face) IP69K IEC 60529 front face)
Ik Degree Of Protection	IK03 conforming to IEC 50102
Mechanical Durability	1000000 cycles
Shock Resistance	25 gn 6 ms) 6000 shocks IEC 60068-2-27 30 gn 18 ms) half sine wave acceleration IEC 60068-2-27 50 gn 11 ms) half sine wave acceleration IEC 60068-2-27
Vibration Resistance	+/- 10 mm 2…11 Hz)IEC 60068-2-6
Electromagnetic Compatibility	Electrostatic discharge immunity test - test level: 8 kV (in free air (in insulating parts)) conforming to IEC 61000-4-2 Electrostatic discharge immunity test - test level: 4 kV (on contact (on metal parts)) conforming to IEC 61000-4-2 Susceptibility to electromagnetic fields - test level: 20 V/m (80...3000 MHz) conforming to IEC 61000-4-3 Susceptibility to electromagnetic fields - test level: 6 V/m (3000...6000 MHz, distance = 20 m) conforming to IEC 61000-4-3
Product Certifications	BT 2006/95/EC CCC CSA GOST UL C-tick
Directives	2004/108/EC - electromagnetic compatibility 1999/5/EC - R&TTE directive

Ordering and shipping details

Category	US1000I22470
Discount Schedule	000I
Gtin	3606480571763
Returnability	Yes

Country Of Origin	US

Packing Units

Unit Type Of Package 1	PCE
Number Of Units In Package 1	1
Package 1 Height	1.57 in (4 cm)
Package 1 Width	2.05 in (5.2 cm)
Package 1 Length	4.88 in (12.4 cm)
Package 1 Weight	2.40 oz (68 g)
Unit Type Of Package 2	S02
Number Of Units In Package 2	42
Package 2 Height	5.91 in (15 cm)
Package 2 Width	11.81 in (30 cm)
Package 2 Length	15.75 in (40 cm)
Package 2 Weight	7.35 lb(US) (3.333 kg)

Contractual warranty

Warranty	18 months

Sustainability

Green Premium™ label is Schneider Electric's commitment to delivering products with best-in-class environmental performance. Green Premium promises compliance with the latest regulations, transparency on environmental impacts, as well as circular and low-CO_2 products.

Guide to assessing product sustainability is a white paper that clarifies global eco-label standards and how to interpret environmental declarations.

Learn more about Green Premium >

Guide to assess a product's sustainability >

Transparency RoHS/REACh

Well-being performance

Mercury Free

Rohs Exemption Information	Yes

Certifications & Standards

Reach Regulation	REACh Declaration
Eu Rohs Directive	Pro-active compliance (Product out of EU RoHS legal scope)
China Rohs Regulation	China RoHS declaration
Environmental Disclosure	Product Environmental Profile
Weee	The product must be disposed on European Union markets following specific waste collection and never end up in rubbish bins.
Circularity Profile	End of Life Information
California Proposition 65	WARNING: This product can expose you to chemicals including: Lead and lead compounds, which is known to the State of California to cause cancer and birth defects or other reproductive harm. For more information go to www.P65Warnings.ca.gov

Dimensions Drawings

Dimension Drawing

Complete Transmitter - Ø40 Mushroom Pushbutton Head Ø22 Spring Return

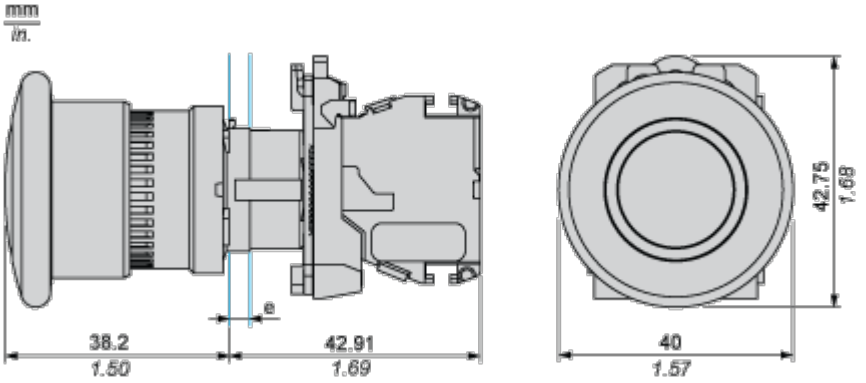

e: panel thickness 1 to 6 mm / 0.039 to 0.24 in.