Product data sheet

Specifications

Head for non illuminated push button, Harmony XB6, green square flush, 16mm, integral LED, spring return, unmarked

ZB6CA3

Product availability: Non-Stock - Not normally stocked in distribution facility

Price*: 14.40 USD

Main

Range Of Product	Harmony XB6
Product Or Component Type	Head for non-illuminated push-button
Device Short Name	ZB6
Bezel Material	Plastic
Mounting Diameter	0.63 in (16 mm)
Sale Per Indivisible Quantity	1
Shape Of Signaling Unit Head	Square
Type Of Operator	spring return
Operator Profile	Green flush, unmarked

Complementary

Cad Overall Width	0.71 in (18 mm)
Cad Overall Height	0.71 in (18 mm)
Cad Overall Depth	1.30 in (33 mm)
Net Weight	0.04 lb(US) (0.016 kg)

Environment

Protective Treatment	TC
Ambient Air Temperature For Storage	-40…158 °F (-40…70 °C)
Ambient Air Temperature For Operation	-13…158 °F (-25…70 °C)
Electrical Shock Protection Class	Class II IEC 61140
Ip Degree Of Protection	IP65 IEC 60529
Nema Degree Of Protection	NEMA 13 UL 50 NEMA 4 UL 50 NEMA 4X UL 50 NEMA 13 CSA C22.2 No 94 NEMA 4 CSA C22.2 No 94 NEMA 4X CSA C22.2 No 94

Price is “List Price” and may be subject to a trade discount – check with your local distributor or retailer for actual price.

Disclaimer: This documentation is not intended as a substitute for and is not to be used for determining suitability or reliability of these products for specific user applications

Standards	JIS C 852 EN/IEC 60947-5-5 EN/IEC 60947-5-1 CSA C22.2 No 14 EN/IEC 60947-1 UL 508 JIS C8201-5-1 JIS C8201-1
Product Certifications	UL CCC CSA GOST
Vibration Resistance	+/- 3 mm 2…500 Hz)IEC 60068-2-6 5 gn 2…500 Hz)IEC 60068-2-6
Shock Resistance	30 gn 18 ms) half sine wave acceleration IEC 60068-2-27 50 gn 11 ms) half sine wave acceleration IEC 60068-2-27

Ordering and shipping details

Category	US10CS222459
Discount Schedule	0CS2
Gtin	3389110775457
Returnability	Yes
Country Of Origin	MX

Packing Units

Unit Type Of Package 1	PCE
Number Of Units In Package 1	1
Package 1 Height	0.98 in (2.5 cm)
Package 1 Width	1.18 in (3.0 cm)
Package 1 Length	1.77 in (4.5 cm)
Package 1 Weight	0.28 oz (8.0 g)
Unit Type Of Package 2	S01
Number Of Units In Package 2	60
Package 2 Height	5.91 in (15.0 cm)
Package 2 Width	5.91 in (15.0 cm)
Package 2 Length	15.75 in (40.0 cm)
Package 2 Weight	24.87 oz (705.0 g)

Contractual warranty

Warranty	18 months

Sustainability

Green Premium™ label is Schneider Electric's commitment to delivering products with best-in-class environmental performance. Green Premium promises compliance with the latest regulations, transparency on environmental impacts, as well as circular and low-CO_2 products.

Guide to assessing product sustainability is a white paper that clarifies global eco-label standards and how to interpret environmental declarations.

Learn more about Green Premium >

Guide to assess a product's sustainability >

Transparency RoHS/REACh

Well-being performance

Reach Free Of Svhc	
Toxic Heavy Metal Free	
Mercury Free	
Rohs Exemption Information	Yes

Certifications & Standards

Reach Regulation	REACh Declaration
Eu Rohs Directive	Pro-active compliance (Product out of EU RoHS legal scope) EU RoHS Declaration
China Rohs Regulation	China RoHS declaration
Environmental Disclosure	Product Environmental Profile
Circularity Profile	End of Life Information
California Proposition 65	WARNING: This product can expose you to chemicals including: Di-isodecyl phthalate (DIDP), which is known to the State of California to cause birth defects or other reproductive harm. For more information go to www.P65Warnings.ca.gov

Dimensions Drawings

Square Head for Illuminated or Non Illuminated Pushbutton

Dimensions

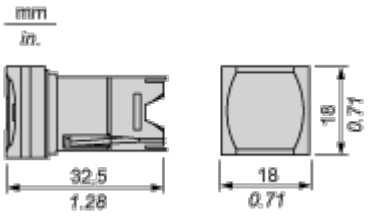

Mounting and Clearance

Panel Cut-out

For Square or Circular Head

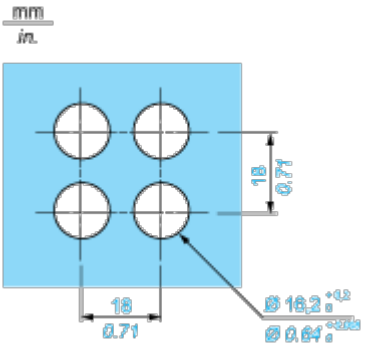

Pushbuttons, Switches and Pilot Lights for Printed Circuit Board Connection

Front Panel Cut-out (Viewed from Installer's Side)

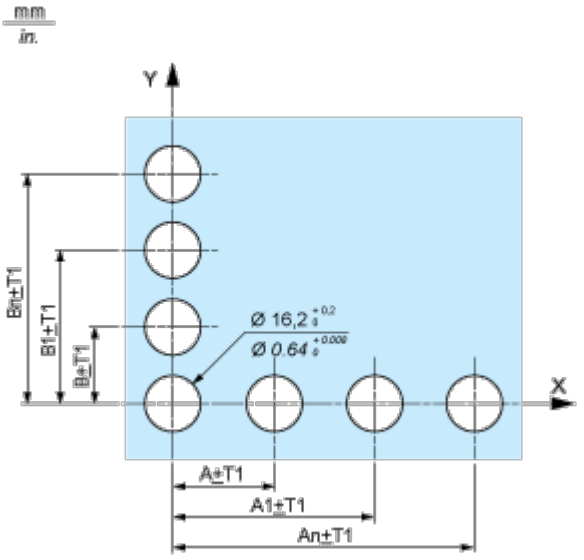

Printed Circuit Board Drillings (Viewed from Electrical Block Side)

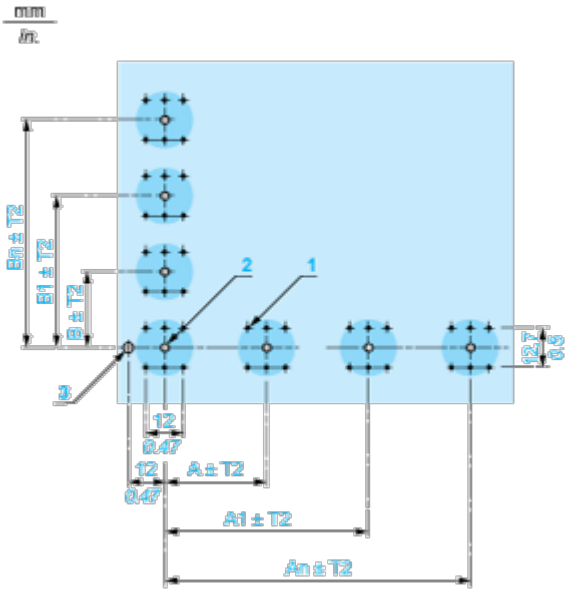

A 24 mm/0.94 in. minimum for rectangular heads, 18 mm/0.71 in. minimum for square or circular heads

B 18 mm/0.71 in. minimum

(1) 6 x Ø 1.1 mm / 6 x Ø 0.04 in. holes.

(2) 1 x Ø $2.6^{0}_{-0.2}$ mm / 1 x Ø $0.10^{0}_{-0.008}$ in. hole for locating pin, only when using socket adaptor ZB6Y010.

(3) 1 x Ø $3.2^{0}_{-0.2}$ mm / 1 x Ø $0.13^{0}_{-0.008}$ in. hole for fixing of printed circuit board onto the front panel using body bracket ZB6Y011. This hole must be drilled on the left-hand side, when heads are positioned at the normal angle. Fit a body bracket ZB6Y011 every 72 mm/2.83 in. maximum for cut-outs on 24 mm/0.94 in. centres (rectangular heads) and 54 mm/2.13 in. maximum for cut-outs on 18 mm/0.71 in. centres (square or circular heads).

General tolerances of the panel and printed circuit board: T1, T2: T1 + T2 = 0.3 mm/0.01 in. maximum.
Installation precautions:

Thickness of printed circuit board: 1.6 mm/0.06 in. minimum.

Mounting with Body Bracket

With socket adaptor ZB6Y010

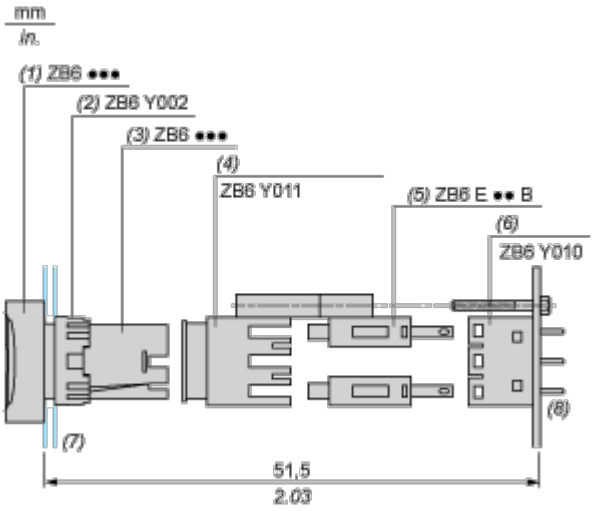

(1) Head

(2) Nut

(3) Body

(4) Body bracket

(5) Contact block

(6) Socket adaptor

(7) Panel

(8) Printed circuit

Direct mounting without socket adaptor ZB6Y010

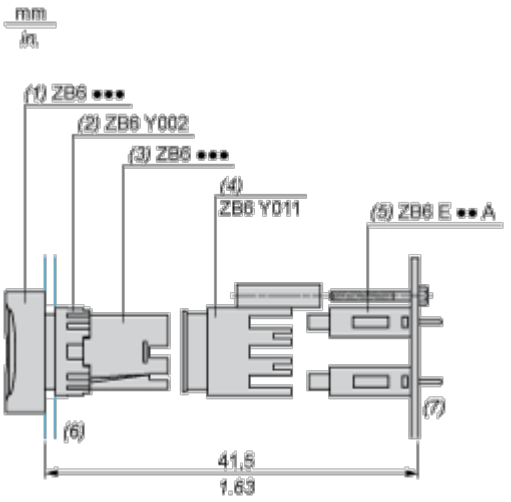

(1) Head

(2) Nut

(3) Body

(4) Body bracket

(5) Contact block

(6) Panel

(7) Printed circuit