Product datasheet

Specifications

contactor, TeSys F, 3P(3NO), AC-3, <=440V 1000A, coil 220V AC

LC1F1000M7

Main

Range	TeSys
Range Of Product	TeSys F
Product Or Component Type	Contactor
Device Short Name	LC1F
Contactor Application	Motor control Resistive load
Utilisation Category	AC-1 AC-3
Poles Description	3P
[Ue] Rated Operational Voltage	<= 440 V AC 50/60 Hz
[Uc] Control Circuit Voltage	220 V AC 40...400 Hz
[Ie] Rated Operational Current	1250 A (at <40 °C) at <= 440 V AC AC-1 1000 A (at <55 °C) at <= 440 V AC AC-3

Complementary

[Uimp] Rated Impulse Withstand Voltage	8 kV
[Ith] Conventional Free Air Thermal Current	1250 A (at 40 °C)
Rated Breaking Capacity	8 kA conforming to IEC 60947-4-1
[Icw] Rated Short-Time Withstand Current	10000 A 40 °C - 10 s 7500 A 40 °C - 30 s 5500 A 40 °C - 1 min 4200 A 40 °C - 3 min 3000 A 40 °C - 10 min
Associated Fuse Rating	2000 A gG at <= 440 V
Average Impedance	0.1 mOhm - Ith 1250 A 50 Hz
[Ui] Rated Insulation Voltage	1000 V conforming to IEC 60947-4-1 1500 V conforming to VDE 0110 group C
Power Dissipation Per Pole	200 W AC-1
Overvoltage Category	III
Power Pole Contact Composition	3 NO
Maximum Operating Rate	600 cyc/h 55 °C
Operating Time	40...80 ms closing 100...200 ms opening

Disclaimer: This documentation is not intended as a substitute for and is not to be used for determining suitability or reliability of these products for specific user applications

Connections - Terminals	Control circuit: screw clamp terminals 1 cable(s) 1…4 mm²flexible without cable end Control circuit: screw clamp terminals 2 cable(s) 1…4 mm²flexible without cable end Control circuit: screw clamp terminals 1 cable(s) 1…4 mm²flexible with cable end Control circuit: screw clamp terminals 2 cable(s) 1…2.5 mm²flexible with cable end Control circuit: screw clamp terminals 1 cable(s) 1…4 mm²solid without cable end Control circuit: screw clamp terminals 2 cable(s) 1…4 mm²solid without cable end Power circuit: bar 3 cable(s) Power circuit: bar 4 cable(s)
Mounting Support	Plate
Motor Power Range	315 kW at 220…230 V 3 phases 560 kW at 380…400 V 3 phases 630 kW at 415 V 3 phases 670 kW at 440 V 3 phases
Motor Starter Type	Direct on-line contactor
Contactor Coil Voltage	220 V AC standard
Standards	EN 60947-1 IEC 60947-4-1 EN 60947-4-1 IEC 60947-1
Product Certifications	CCC CSA CB UKCA
Compatibility Code	LC1F
Control Circuit Type	AC at 40...400 Hz

Environment

Ip Degree Of Protection	IP20 front face with shrouds conforming to IEC 60529 IP20 front face with shrouds conforming to VDE 0106
Protective Treatment	TH
Ambient Air Temperature For Operation	-5…40 °C
Ambient Air Temperature For Storage	-60…80 °C
Permissible Ambient Air Temperature Around The Device	-40…60 °C
Height	332 mm
Width	438 mm
Depth	238.6 mm
Operating Altitude	3000 m without derating
Net Weight	31 kg

Packing Units

Unit Type Of Package 1	PCE
Number Of Units In Package 1	1
Package 1 Height	36.1 cm
Package 1 Width	48.3 cm
Package 1 Length	60.3 cm
Package 1 Weight	23.0 kg

Sustainability

Green Premium™ label is Schneider Electric's commitment to delivering products with best-in-class environmental performance. Green Premium promises compliance with the latest regulations, transparency on environmental impacts, as well as circular and low-CO_2 products.

Guide to assessing product sustainability is a white paper that clarifies global eco-label standards and how to interpret environmental declarations.

Learn more about Green Premium >

Guide to assess a product's sustainability >

Transparency RoHS/REACh

Well-being performance

Mercury Free

Rohs Exemption Information	Yes

Certifications & Standards

Reach Regulation	REACh Declaration
Eu Rohs Directive	Compliant with Exemptions
China Rohs Regulation	China RoHS declaration Product out of China RoHS scope. Substance declaration for your information
Environmental Disclosure	Product Environmental Profile
Weee	The product must be disposed on European Union markets following specific waste collection and never end up in rubbish bins
Circularity Profile	End of Life Information

Dimensions Drawings

Dimensions and Drawings

LC1 F1000

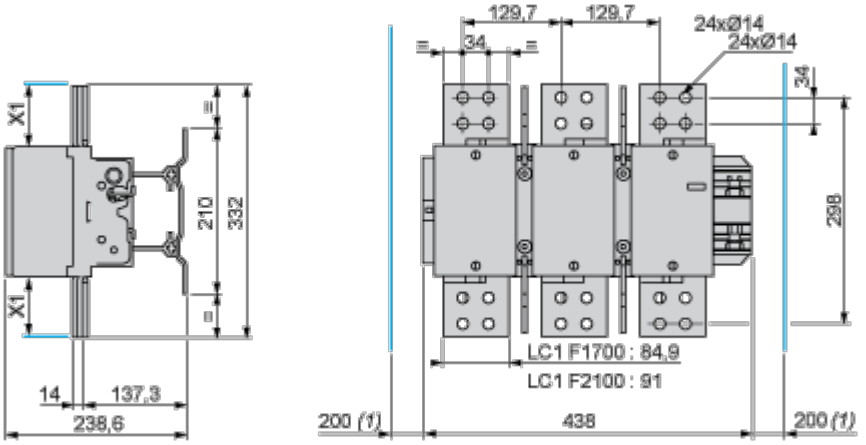

(1) Minimum distance required for coil removal.

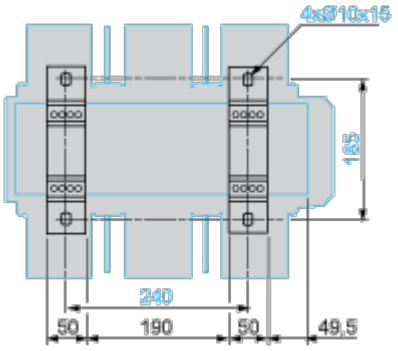

NOTE: X1 (mm) = Minimum electrical clearance according to operating voltage and breaking capacity.

Voltage	200…500 V	690…1000 V
X1 (mm)	90	100

Motor Starter BOM
Motor Starter BOM