Product datasheet

Specifications

Green Premium™

motion control stepper motor drive - SD326 - pulse/direction - <= 2.5 A

SD326RU25S2

Main

Range Of Product	Lexium SD3
Product Or Component Type	Motion stepper drive
Device Short Name	SD326
Supply Voltage Limits	200…240 V 100…120 V

Complementary

Format Of The Drive	Block
Network Number Of Phases	Single phase
[Us] Rated Supply Voltage	100...120 V - 15...10 % 200...230 V - 15...10 %
Supply Voltage Type	AC/DC
Network Frequency Limits	50…60 Hz (- 15...10 %)
Communication Interface	Pulse/direction, integrated
Function Available	Rotation monitoring Holding brake monitoring
Maximum Motor Phase Current	2.5 A
Current Consumption	<= 0.2 mA 24 V control voltage
Nominal Power	180 W at 115 V 270 W at 230 V
Short-Circuit Current	0.5 kA
Associated Fuse Rating	6 A at 115 V 6 A at 230 V
Overvoltage Category	III
Inrush Current	60 A
Maximum Leakage Current	30 mA IEC 60990-3
Voltage State 0 Guaranteed	<= 5 V for 24 V optocoupler input signals <= 0.5 V for 5 V optocoupler input signals
Voltage State 1 Guaranteed	15...30 V for 24 V optocoupler input signals 2.5...5.25 V for 5 V optocoupler input signals
Input Current	25 mA for 5 V optocoupler input signals 7 mA for 24 V optocoupler input signals
Maximum Input Frequency	200 kHz for 24 V optocoupler input signals 200 kHz for 5 V optocoupler input signals 400 kHz for ENC_A/ENC_B signal input
Maximum Switching Voltage	30 V DC (readiness signal output)

Disclaimer: This documentation is not intended as a substitute for and is not to be used for determining suitability or reliability of these products for specific user applications

Maximum Switching Current	200 mA (readiness signal output) 50 mA (24 V output signals)RM-FAULT_OUT 1.7 mA (24 V output signals)+BRAKE_OUT
Maximum Voltage Drop	<1 V 50 mA load for 24 V output signals <1 V 50 mA load for ENC+5V_OUT signal output <1 V 50 mA load for readiness signal output
Physical Interface	RS422 - ENC_A/ENC_B signal input
Output Voltage	<= 30 V (24 V output signals) 4.75...5.25 V (ENC+5V_OUT signal output)
Input Voltage	24 V -15 %/+20 % for 24 V control voltage
Residual Ripple	<= 5 % (24 V control voltage)
Type Of Cooling	Natural convection
Maximum Mechanical Speed	3000 rpm
Height	145 mm
Width	72 mm
Depth	140 mm
Shock Resistance	15 gn for 11 ms conforming to IEC 60068-2-27
Net Weight	1.1 kg

Environment

Electromagnetic Compatibility	Electrostatic discharge level 3 conforming to IEC 61000-4-2 Immunity to electrical transients level 4 conforming to IEC 61000-4-4 Immunity to radiated radio-electrical interference level 3 conforming to IEC 61000-4-3 Voltage/current impulse level 3 conforming to IEC 61000-4-5
Standards	EN 61800-3 EN/IEC 61800-5-1
Product Certifications	UL cUL
Marking	CE
Ambient Air Temperature For Operation	0…40 °C conforming to UL 0…50 °C
Ambient Air Temperature For Storage	-25…70 °C
Pollution Degree	Level 2
Relative Humidity	5…85 % without condensation
Operating Altitude	<= 1000 m without derating > 1000...< 2000 m without derating (maximum ambient temperature 40°C, no protective film, lateral distance of > 50mm)
Vibration Resistance	1 gn (f= 13…150 Hz) conforming to IEC 60068-2-6 1.5 mm (f= 3…13 Hz) conforming to IEC 60068-2-6
Ip Degree Of Protection	IP20 On upper part: IP40 (without removal of protective film)

Packing Units

Unit Type Of Package 1	PCE
Number Of Units In Package 1	1
Package 1 Height	13.5 cm
Package 1 Width	16.8 cm
Package 1 Length	19.0 cm

Package 1 Weight	1.255 kg
Unit Type Of Package 2	S04
Number Of Units In Package 2	6
Package 2 Height	30 cm
Package 2 Width	40 cm
Package 2 Length	60 cm
Package 2 Weight	8.369 kg

Contractual warranty

Warranty	18 months

Sustainability

Green Premium™ label is Schneider Electric's commitment to delivering products with best-in-class environmental performance. Green Premium promises compliance with the latest regulations, transparency on environmental impacts, as well as circular and low-CO_2 products.

Guide to assessing product sustainability is a white paper that clarifies global eco-label standards and how to interpret environmental declarations.

Learn more about Green Premium >

Guide to assess a product's sustainability >

Transparency RoHS/REACh

Well-being performance

Mercury Free	
Rohs Exemption Information	Yes
Pvc Free	

Certifications & Standards

Reach Regulation	REACh Declaration
Eu Rohs Directive	Pro-active compliance (Product out of EU RoHS legal scope)
China Rohs Regulation	China RoHS declaration
Environmental Disclosure	Product Environmental Profile
Circularity Profile	End of Life Information

Dimensions Drawings

Dimensions

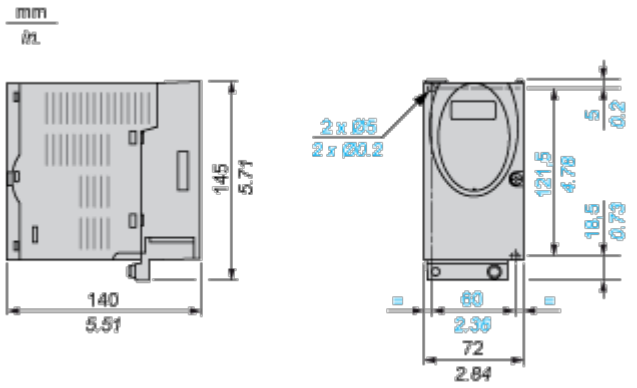

EMC mounting plate (included)

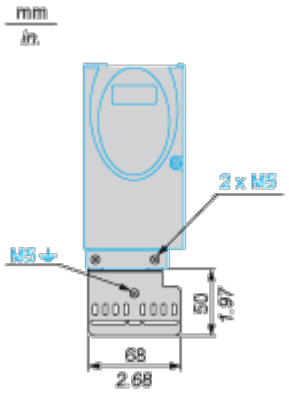

Mounting and Clearance

Mounting and Clearance

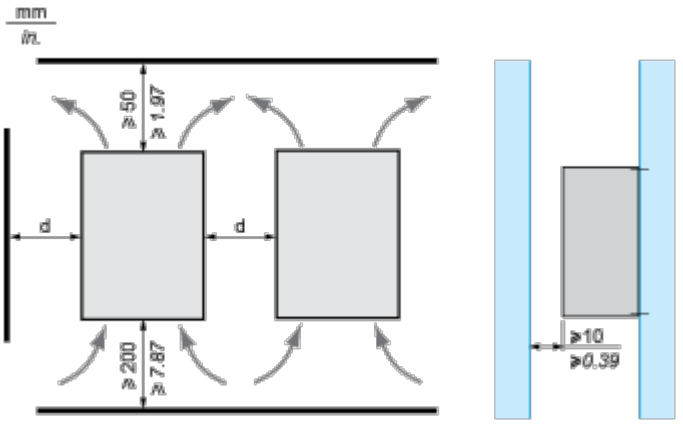

Ambient temperature	Mounting distances	Mounting recommendations	
		Without protective film (1)	With protective film
0 ... +40 °C	d > 50 mm/ 1.97 in.	None	None
	d > 50 mm/ 1.97 in.	None	d > 10 mm/0.39 in.
+40 ... +50 °C	d > 50 mm/ 1.97 in.	None	Reduce nominal and continuous current by 2.2 % per °C above 40 °C
	d > 50 mm/ 1.97 in.	Reduce nominal and continuous current	Operation not possible
(1) Recommendation: remove protective film after installation.			

Connections and Schema
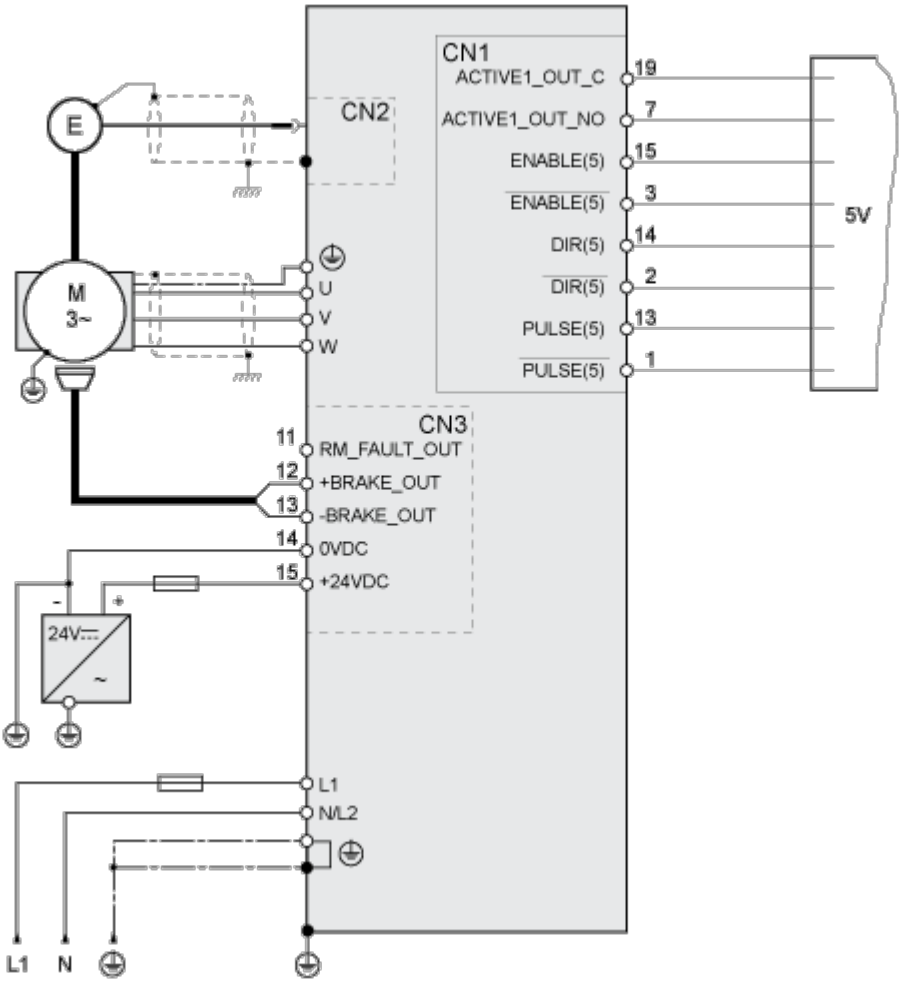
SD326 Connection Example