Product datasheet

Specifications

Green Premium™

motion control stepper motor drive - SD328 - Profibus DP fieldbus - <= 6.8 A

SD328BU68S2

Main

Range Of Product	Lexium SD3
Product Or Component Type	Motion stepper drive
Device Short Name	SD328
Supply Voltage Limits	200…240 V 100…120 V
Bus Type	Fieldbus

Complementary

Format Of The Drive	Block
Network Number Of Phases	Single phase
[Us] Rated Supply Voltage	100...120 V - 15...10 % 200...230 V - 15...10 %
Supply Voltage Type	AC/DC
Network Frequency Limits	50…60 Hz (- 15...10 %)
Communication Interface	Profibus DP fieldbus, integrated
Maximum Motor Phase Current	6.8 A
Current Consumption	5 A 230 V main supply 7 A 115 V main supply <= 0.2 mA 24 V control voltage
Nominal Power	280 W at 115 V 420 W at 230 V
Short-Circuit Current	0.5 kA
Power Losses	<= 65 W
Associated Fuse Rating	10 A at 115 V 6 A at 230 V
Overvoltage Category	III
Inrush Current	60 A
Maximum Leakage Current	30 mA <10 m IEC 60990-3
Voltage State 0 Guaranteed	-3...5 V for 24 V input signals
Voltage State 1 Guaranteed	15...30 V for 24 V input signals
Input Current	10 mA for 24 V input signals
Maximum Input Frequency	200 kHz for signal input ENC_A, ENC_B, ENC_I - control type pulse/direction 400 kHz for signal input ENC_A, ENC_B, ENC_I - control type A/B
Maximum Output Frequency	400 kHz for pulse/direction interface A/B 200 kHz for pulse/direction interface pulse/direction

Disclaimer: This documentation is not intended as a substitute for and is not to be used for determining suitability or reliability of these products for specific user applications

Maximum Switching Current	50 mA (24 V output signals)
Maximum Voltage Drop	<1 V 50 mA load for 24 V output signals
Physical Interface	RS422 - pulse/direction interface RS422 - signal input ENC_A, ENC_B, ENC_I
Output Voltage	<= 30 V (24 V output signals) 4.75...5.25 V (ENC+5V_OUT signal output)
Input Voltage	24 V -15 %/+20 % for 24 V control voltage
Residual Ripple	< 5 % (24 V control voltage)
Resistance	5 kOhm (pulse/direction interface)
Safety Function	Safe torque off safety function for machine conforming to IEC/EN 61800-5-2 Safe torque off safety function for machine conforming to ISO 13849-1 level d Safe torque off safety function for system process conforming to EN/IEC 61508 level SIL2 Safe torque off safety function for system process conforming to IEC/EN 61800-5-2
Type Of Cooling	Fan
Maximum Mechanical Speed	3000 rpm
Height	145 mm
Width	72 mm
Depth	140 mm
Shock Resistance	15 gn for 11 ms conforming to IEC 60068-2-27
Net Weight	1.2 kg

Environment

Electromagnetic Compatibility	Electrostatic discharge level 3 conforming to IEC 61000-4-2 Immunity to electrical transients level 4 conforming to IEC 61000-4-4 Immunity to radiated radio-electrical interference level 3 conforming to IEC 61000-4-3 Voltage/current impulse level 3 conforming to IEC 61000-4-5
Standards	EN/IEC 61800-3 EN/IEC 61800-5-1
Product Certifications	UL cUL TÜV
Marking	CE
Ambient Air Temperature For Operation	0…50 °C
Ambient Air Temperature For Storage	-25…70 °C
Pollution Degree	Level 2
Relative Humidity	5…85 % without condensation
Operating Altitude	<= 1000 m without derating > 1000...< 2000 m without derating (maximum ambient temperature 40°C, no protective film, lateral distance of > 50mm)
Vibration Resistance	1 gn (f= 13…150 Hz) conforming to IEC 60068-2-6 1.5 mm (f= 3…13 Hz) conforming to IEC 60068-2-6
Ip Degree Of Protection	IP20 On upper part: IP40 (without removal of protective film)

Packing Units

Unit Type Of Package 1	PCE
Number Of Units In Package 1	1
Package 1 Height	17 cm

Package 1 Width	18 cm
Package 1 Length	19.5 cm
Package 1 Weight	1.34 kg
Unit Type Of Package 2	S04
Number Of Units In Package 2	6
Package 2 Height	30 cm
Package 2 Width	40 cm
Package 2 Length	60 cm
Package 2 Weight	9.292 kg

Contractual warranty

Warranty	18 months

Sustainability

Green Premium™ label is Schneider Electric's commitment to delivering products with best-in-class environmental performance. Green Premium promises compliance with the latest regulations, transparency on environmental impacts, as well as circular and low-CO_2 products.

Guide to assessing product sustainability is a white paper that clarifies global eco-label standards and how to interpret environmental declarations.

Learn more about Green Premium >

Guide to assess a product's sustainability >

Transparency RoHS/REACh

Well-being performance

Mercury Free	
Rohs Exemption Information	Yes
Pvc Free	

Certifications & Standards

Reach Regulation	REACh Declaration
Eu Rohs Directive	Pro-active compliance (Product out of EU RoHS legal scope)
China Rohs Regulation	China RoHS declaration
Environmental Disclosure	Product Environmental Profile
Circularity Profile	End of Life Information

Dimensions Drawings

Dimensions

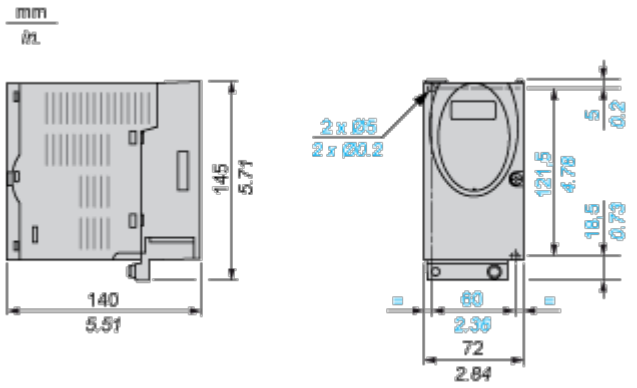

EMC mounting plate (included)

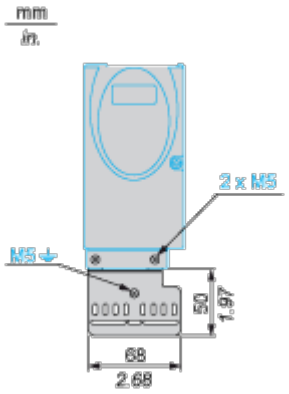

Mounting and Clearance

Mounting and Clearance

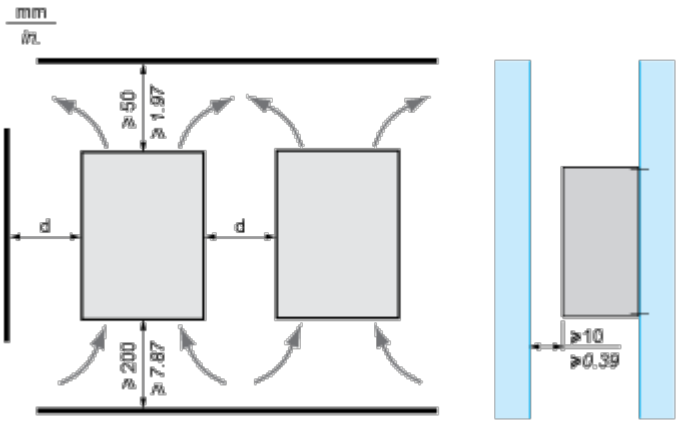

Ambient temperature	Mounting distances	Mounting recommendations	
		Without protective film (1)	With protective film
0 ... +40 °C	d > 50 mm/ 1.97 in.	None	None
	d > 50 mm/ 1.97 in.	None	d > 10 mm/0.39 in.
+40 ... +50 °C	d > 50 mm/ 1.97 in.	None	Reduce nominal and continuous current by 2.2 % per °C above 40 °C
	d > 50 mm/ 1.97 in.	Reduce nominal and continuous current	Operation not possible
(1) Recommendation: remove protective film after installation.			

Connections and Schema

SD328B Connection Example with Fieldbus Control

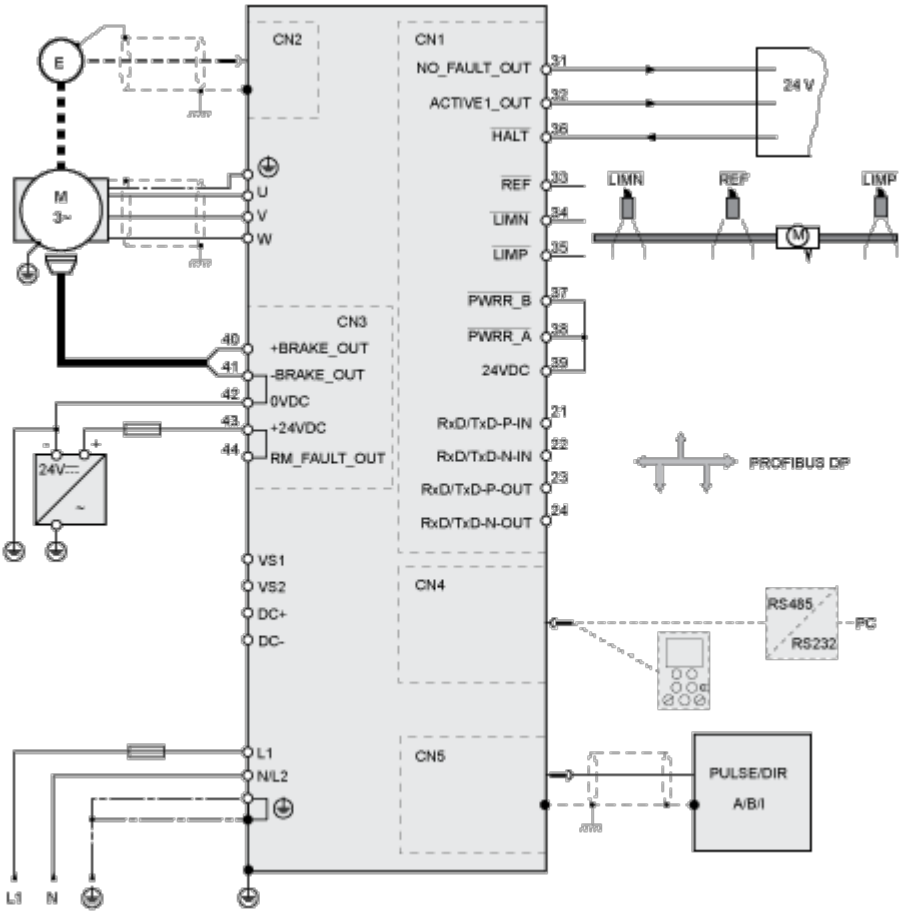

Example of Application of the Safety Function: Category 0 Stop

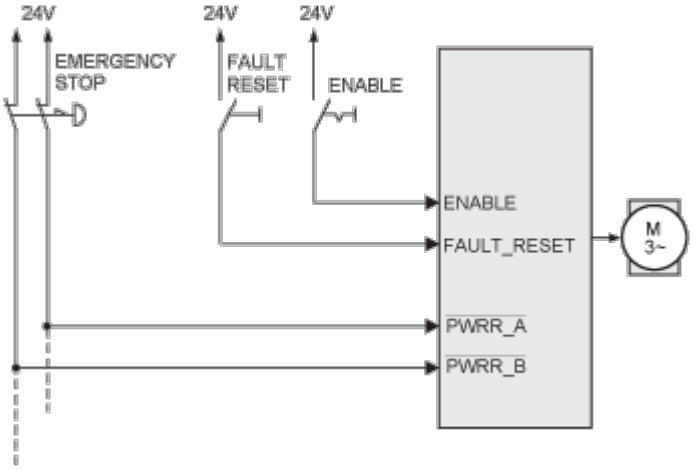
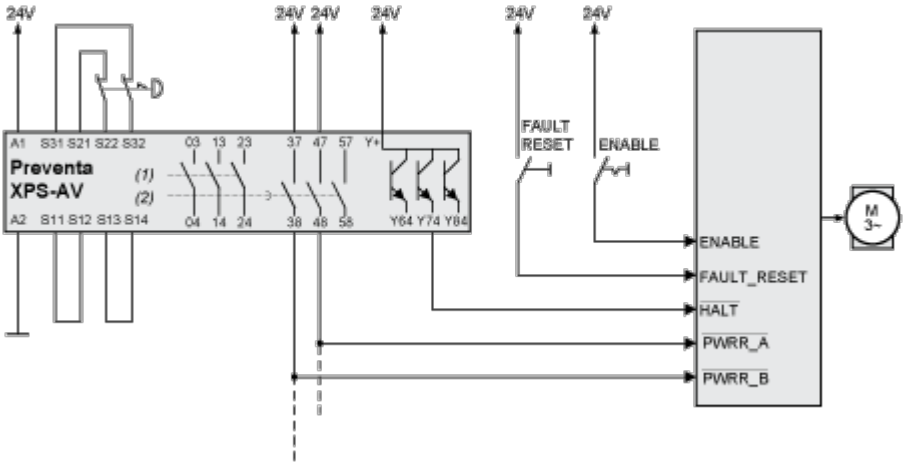
Example of Application of the Safety Function: Category 1 Stop