Product datasheet

Specifications

Green Premium™

round pilot light Ø 22 - red - integral LED - 220 V AC - screw clamp terminals

XB7EVM4LC

Discontinued on: Nov 1, 2020

Discontinued

Main

Range Of Product	Harmony XB7
Device Short Name	XB7
Mounting Diameter	22 mm
Sale Per Indivisible Quantity	1
Shape Of Signaling Unit Head	Round
Cap/Operator Or Lens Colour	Red
Light Source	LED
Bulb Base	Integral LED
[Us] Rated Supply Voltage	220 V AC 50/60 Hz
Device Presentation	Monolithic product

Complementary

Height	29 mm
Width	29 mm
Depth	53 mm
Terminals Description Iso N°1	(X1-X2)PL
Net Weight	0.017 kg
Device Mounting	Fixing hole - diameter: 22.5 mm 22.3 +0.4/0 conforming to EN/IEC 60947-5-1
Fixing Center	>= 30 x 40 mm (support panel) metal - thickness: 1…6 mm >= 30 x 40 mm (support panel) plastic - thickness: 2…6 mm
Fixing Mode	Fixing nut beneath head: 0.8…1.6 N.m
Marking	CCC
Connections - Terminals	Screw clamp terminals, <= 2 x 1.5 mm² with cable end conforming to EN/IEC 60947-1 Screw clamp terminals, 1 x 0.5...1 x 2.5 mm² without cable end conforming to EN/IEC 60947-1
[Ui] Rated Insulation Voltage	250 V (pollution degree 3) conforming to EN/IEC 60947-1
[Uimp] Rated Impulse Withstand Voltage	6 kV conforming to EN/IEC 60947-1
Signalling Type	Steady
Supply Voltage Limits	0.8…1.1 V AC
Current Consumption	16...20 mA
Service Life	50000 h at rated voltage and 25 °C

Disclaimer: This documentation is not intended as a substitute for and is not to be used for determining suitability or reliability of these products for specific user applications

Environment

Protective Treatment	TC
Ambient Air Temperature For Storage	-40…80 °C
Ambient Air Temperature For Operation	-25…70 °C
Overvoltage Category	Class I conforming to IEC 536
Ip Degree Of Protection	IP20 (rear face) conforming to IEC 60529 IP65 (front face) conforming to IEC 60529
Standards	GB 14048.1 IEC 60947-1 IEC 60947-5-1 GB 14048.5
Product Certifications	CCC
Vibration Resistance	5 gn (f= 2…500 Hz) conforming to IEC 60068-2-6
Shock Resistance	50 gn (duration = 11 ms) for half sine wave acceleration conforming to IEC 60068-2-27 30 gn (duration = 18 ms) for half sine wave acceleration conforming to IEC 60068-2-27
Electromagnetic Compatibility	Disturbing field emission class B conforming to EN 55011

Sustainability

Green Premium™ label is Schneider Electric's commitment to delivering products with best-in-class environmental performance. Green Premium promises compliance with the latest regulations, transparency on environmental impacts, as well as circular and low-CO_2 products.

Guide to assessing product sustainability is a white paper that clarifies global eco-label standards and how to interpret environmental declarations.

Learn more about Green Premium >

Guide to assess a product's sustainability >

Transparency RoHS/REACh

Well-being performance

Reach Free Of Svhc	
Toxic Heavy Metal Free	
Mercury Free	
Rohs Exemption Information	Yes

Certifications & Standards

Reach Regulation	REACh Declaration
Eu Rohs Directive	Pro-active compliance (Product out of EU RoHS legal scope) EU RoHS Declaration
China Rohs Regulation	China RoHS declaration
Environmental Disclosure	Product Environmental Profile
Weee	The product must be disposed on European Union markets following specific waste collection and never end up in rubbish bins
Circularity Profile	End of Life Information

Dimensions Drawings

Dimensions

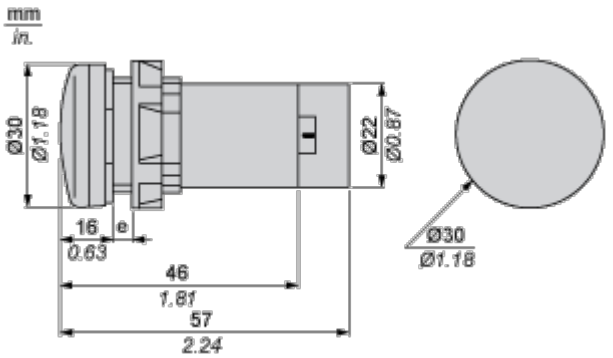

e Support panel thickness: 1 to 6 mm/0.4 to 0.24 in. (metal), 2 to 6 mm/0.8 to 0.24 in. (plastic).

Mounting and Clearance

Mounting

Diameter of Finished Fixing Holes

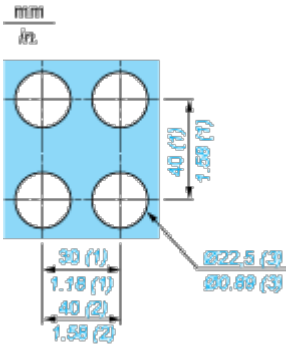

(1) Minimum value.

(2) 40 mm/1.58 in. for Emergency switching off pushbutton only.

(3) Standard value: Ø 22.3 (0; + 0.4) mm/Ø 0.88 (0; + 0.02) in.

Faston Clip Connection

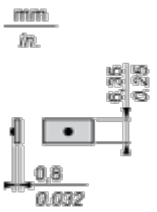

“U” Type Tag Connection

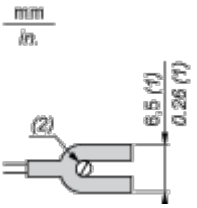

(1) 6.5 mm/0.26 in. recommended, 7 mm/0.28 in. max.

(2) M3 screw clamp terminal.

Connections and Schema

Wiring Diagram

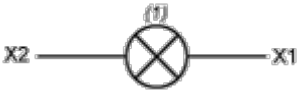

(1) LED