Product datasheet

Specifications

Green Premium™

Single foot switch, Harmony XPE, plastic, black, without cover, 1 step, 1 contact 1NC+NO, IP43

XPEA110

Discontinued on: Jan 23, 2021

End-of-service on: Jan 24, 2021

Discontinued - Service only

Main

Range Of Product	Harmony XPE
Product Or Component Type	Foot switch
Material	Plastic
Foot Switch Type	Single foot switch
Device Short Name	XPEA
Trigger Mechanism	Without trigger mechanism
Contact Operation	1 step
Contacts Type And Composition	1 NC + 1 NO
Colour	Black

Complementary

Positive Opening	With conforming to IEC 60947-5-1 appendix K
Connections - Terminals	Screw clamp terminal, <= 1 x 2.5 mm² with or without cable end Screw clamp terminal, <= 2 x 1.5 mm² with or without cable end
Cable Entry	1 plain hole for M20 cable gland 1 plain hole for M16 cable gland
Mechanical Durability	2000000 cycles
[Ie] Rated Operational Current	3 A, 240 V, AC-15, A300 0.27 A, 250 V, DC-13, Q300 conforming to IEC 60947-5-1 appendix A
[Ui] Rated Insulation Voltage	500 V (pollution degree 3) conforming to IEC 60947-1 500 V (pollution degree 3) conforming to NF C 20-040 group C 500 V (pollution degree 3) conforming to VDE 0110 group C 300 V conforming to UL 508 300 V conforming to CSA C22.2 No 14
[Uimp] Rated Impulse Withstand Voltage	6 kV conforming to IEC 60947-1
Maximum Resistance Across Terminals	25 MOhm conforming to IEC 60255-7 category 3 25 MOhm conforming to NF C 93-050 method A
Short-Circuit Protection	10 A cartridge fuse type gG conforming to IEC 60947-5-1 10 A cartridge fuse type gG conforming to VDE 0660-200
Rated Operational Power In W	10 W DC-13, operating rate <60 cyc/mn, 5000000 cycles, 24 V, load factor: 0.5 conforming to IEC 60947-5-1 appendix C 4 W DC-13, operating rate <60 cyc/mn, 5000000 cycles, 120 V, load factor: 0.5 conforming to IEC 60947-5-1 appendix C 7 W DC-13, operating rate <60 cyc/mn, 5000000 cycles, 48 V, load factor: 0.5 conforming to IEC 60947-5-1 appendix C
Net Weight	0.275 kg

Disclaimer: This documentation is not intended as a substitute for and is not to be used for determining suitability or reliability of these products for specific user applications

Environment

Standards	IEC 60947-5-1
Protective Treatment	TH
Ambient Air Temperature For Operation	-25…55 °C
Ambient Air Temperature For Storage	-40…70 °C
Vibration Resistance	5 gn (f= 10…500 Hz) conforming to IEC 60068-2-6
Shock Resistance	25 gn conforming to IEC 60068-2-27
Overvoltage Category	Class II conforming to IEC 61140 Class II conforming to NF C 20-030
Ip Degree Of Protection	IP43 conforming to IEC 60529

Packing Units

Unit Type Of Package 1	PCE
Number Of Units In Package 1	1
Package 1 Height	12.5 cm
Package 1 Width	9.4 cm
Package 1 Length	18.9 cm
Package 1 Weight	334.0 g
Unit Type Of Package 2	S02
Number Of Units In Package 2	4
Package 2 Height	15.0 cm
Package 2 Width	30.0 cm
Package 2 Length	40.0 cm
Package 2 Weight	1.69 kg
Unit Type Of Package 3	P06
Number Of Units In Package 3	64
Package 3 Height	77.0 cm
Package 3 Width	80.0 cm
Package 3 Length	60.0 cm
Package 3 Weight	35.54 kg

Contractual warranty

Warranty	18 months

Sustainability

Green Premium™ label is Schneider Electric's commitment to delivering products with best-in-class environmental performance. Green Premium promises compliance with the latest regulations, transparency on environmental impacts, as well as circular and low-CO_2 products.

Guide to assessing product sustainability is a white paper that clarifies global eco-label standards and how to interpret environmental declarations.

Learn more about Green Premium >

Guide to assess a product's sustainability >

Transparency RoHS/REACh

Well-being performance

Mercury Free

Rohs Exemption Information	Yes

Certifications & Standards

Reach Regulation	REACh Declaration
Eu Rohs Directive	Pro-active compliance (Product out of EU RoHS legal scope)
China Rohs Regulation	China RoHS declaration
Environmental Disclosure	Product Environmental Profile
Weee	The product must be disposed on European Union markets following specific waste collection and never end up in rubbish bins
Circularity Profile	No need of specific recycling operations

Dimensions Drawings

Foot Switch without Trigger Mechanism

Dimensions

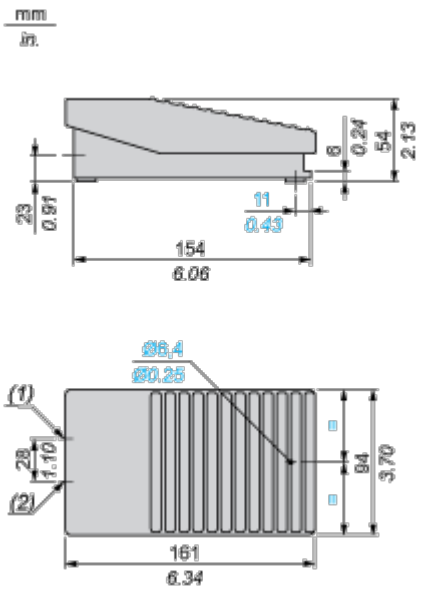

(1) 1 plain hole for ISO M20 or n° 13 (Pg 13.5) cable gland.

(2) 1 plain hole for ISO M20 or n° 9 (Pg 11) cable gland.

Performance Curves

Electrical Durability of Contacts

AC-15 Utilization Category

Operating rate: 3600 operating cycles/hour. Load factor: 0.5.
Inductive circuit:

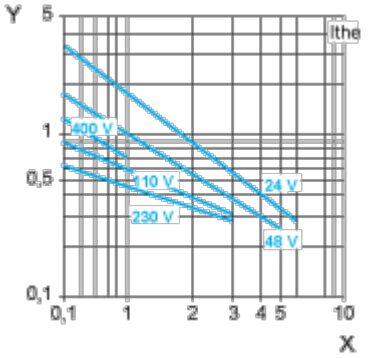

X Current in A

Y Millions of operating cycles

DC-13 Utilization Category

Refer to the product characteristic “Operational power in W”.