Product data sheet

Specifications

angular gearbox straight teeth GBY, Lexium, 120mm, reduction 40:1, 13arc.min, 230N.m

GBY120040K

Main

Range Compatibility	Lexium 52 Lexium 32 Lexium 32i Lexium 62 Lexium 62 ILM
Product Or Component Type	Angular planetary gearbox
Gear Box Type	Straight teeth
Device Short Name	GBY
Product Compatibility	BMI (70 mm, 2 motor stacks) BMH (70 mm, 2 motor stacks) BSH (70 mm, 2 motor stacks) BSH (100 mm, 1 motor stacks) SH3 MH3 ILM
Gearbox External Diameter	120 mm
Reduction Ratio	40:1

Complementary

Maximum Torsional Backlash	13 arc.min
Torsional Rigidity	13 N.m/arcmin
Housing Colour	Black
Housing Material	Black anodized aluminium
Shaft Material	C 45
Additional Information	Lubricated for life
Service Life In Hours	30000 h at 100 rpm at 30 °C
Mounting Position	Any position
Efficiency	92 %
Maximum Radial Force Fr	1500 N at 100 rpm, force applied at mid-distance from output shaft during 30000 hour at 30 °C
Maximum Axial Force Fa	2100 N at 100 rpm, during 30000 hour at 30°C
Moment Of Inertia	2.84 kg.cm²
Continuous Output Torque	230 N.m at 100 rpm at 30 °C
Maximum Output Torque	368 N.m at 100 rpm at 30 °C
Net Weight	14 kg
Input Diameter	24.0 mm

Disclaimer: This documentation is not intended as a substitute for and is not to be used for determining suitability or reliability of these products for specific user applications

Environment

Noise Level	75 dB at 1 m, no-load
Ip Degree Of Protection	Shaft output: IP54
Ambient Temperature For Operation	-25…90 °C

Packing Units

Unit Type Of Package 1	PCE
Number Of Units In Package 1	1
Package 1 Height	24.5 cm
Package 1 Width	23.0 cm
Package 1 Length	31.0 cm
Package 1 Weight	12.118 kg
Unit Type Of Package 2	S06
Number Of Units In Package 2	5
Package 2 Height	73.5 cm
Package 2 Width	60.0 cm
Package 2 Length	80.0 cm
Package 2 Weight	73.59 kg

Contractual warranty

Warranty	18 months

Sustainability

Green Premium™ label is Schneider Electric's commitment to delivering products with best-in-class environmental performance. Green Premium promises compliance with the latest regulations, transparency on environmental impacts, as well as circular and low-CO_2 products.

Guide to assessing product sustainability is a white paper that clarifies global eco-label standards and how to interpret environmental declarations.

Learn more about Green Premium >

Guide to assess a product's sustainability >

Transparency RoHS/REACh

Well-being performance

- Mercury Free
- Rohs Exemption Information — Yes
- Pvc Free

Certifications & Standards

Reach Regulation	REACh Declaration
Eu Rohs Directive	Pro-active compliance (Product out of EU RoHS legal scope)
China Rohs Regulation	China RoHS declaration Product out of China RoHS scope. Substance declaration for your information
Environmental Disclosure	Product Environmental Profile
Circularity Profile	No need of specific recycling operations
California Proposition 65	WARNING: This product can expose you to chemicals including: Lead and lead compounds, which is known to the State of California to cause cancer and birth defects or other reproductive harm. For more information go to www.P65Warnings.ca.gov

Dimensions Drawings

Dimensions with Servo Motor Adaptation Kit

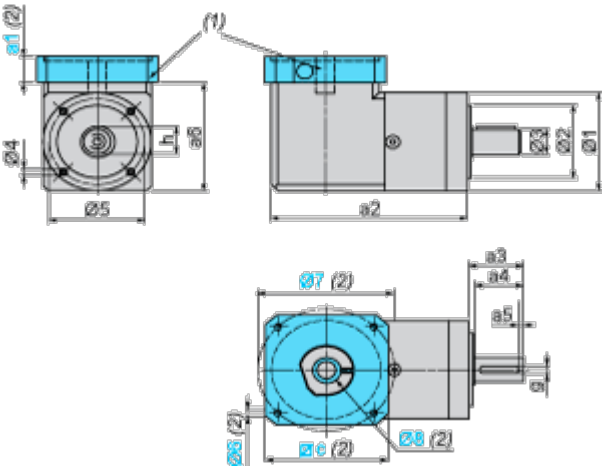

(1) GBK adaptation kit

(2) GBK adaptation kit related dimensions a1, c, Ø6, Ø7, Ø8 depend on the gearbox and servo motor combination

Ø8 shaft end adaptor in case motor shaft diameter is smaller than gearbox input coupling diameter

Values in mm

a2	a3	a4	a5	h	g	Ø1	Ø2	Ø3	Ø4	Ø5	a6
221.5	55	50	5	28	8	115	80 h7	25 h7	M10 x 16	100	123.7

Values in in.

a2	a3	a4	a5	h	g	Ø1	Ø2	Ø3	Ø4	Ø5	a6
8.72	2.17	1.97	0.197	1.10	0.31	4.53	3.15 h7	0.98 h7	M10 x 0.63	3.94	4.87