Product datasheet

Specifications

Green Premium™

discrete output module Modicon Quantum - 32 O - negative logic (sink)

140DDO35310

To be discontinued

Discontinued on: 31 Dec 2022

To be end-of-service on: 31 Dec 2030

Price: 21,777.35 ZAR

Main

Range Of Product	Modicon Quantum automation platform
Product Or Component Type	Dc discrete output module
Discrete Output Number	32

Complementary

Group Of Channels	4 groups of 8
Discrete Output Logic	Negative logic (sink)
Addressing Requirement	2 output words
Discrete Output Voltage	24 V DC
Output Voltage Limits	19.2...30 V
Absolute Maximum Output	50 V for 1 s decaying pulse
Maximum Voltage Drop	<0.4 V 0.5 A
Maximum Load Current	16 A per module 4 A per group
Surge Current	5 A for 1 ms
Response Time	<= 1 ms at state 0 to state 1 <= 1 ms at state 1 to state 0
Maximum Leakage Current	0.4 mA 30 V
Load Inductance	Inductance(H) = 0.5/((current(A))² x (switching frequency(Hz)))
Maximum Tungsten Load	12 W 24 V
Fault Indication	Loss of field power Blown fuse
Associated Fuse Rating	3 A each point 5 A per group
Isolation Between Channels And Bus	1780 Vrms DC for 1 minute
Isolation Between Group	500 Vrms DC for 1 minute
Protection Type	Internal output protection by 5 A fuse per group
Power Dissipation	2.0 W + (0.4 V x total load current)
Marking	CE
Local Signalling	1 LED (green) for bus communication is present (Active) 1 LED (red) for external fault detected (F) 32 LEDs (green) for input status

Excluding VAT and subject to change. Please check with your local distributor through "Where to buy"

Disclaimer: This documentation is not intended as a substitute for and is not to be used for determining suitability or reliability of these products for specific user applications

Bus Current Requirement	330 mA
Module Format	Standard
Net Weight	0.45 kg

Environment

Product Certifications	FM Class 1 Division 2 RINA GOST C-Tick RMRS
Standards	UL 508 CSA C22.2 No 142
Resistance To Electrostatic Discharge	4 kV contact conforming to IEC 801-2 8 kV on air conforming to IEC 801-2
Resistance To Electromagnetic Fields	10 V/m 80…2000 MHz conforming to IEC 801-3
Ambient Air Temperature For Operation	0…60 °C
Ambient Air Temperature For Storage	-40…85 °C
Relative Humidity	95 % without condensation
Operating Altitude	<= 5000 m

Packing Units

Unit Type Of Package 1	PCE
Number Of Units In Package 1	1
Package 1 Height	16.3 cm
Package 1 Width	4.5 cm
Package 1 Length	31.2 cm
Package 1 Weight	486.0 g
Unit Type Of Package 2	S03
Number Of Units In Package 2	7
Package 2 Height	30.0 cm
Package 2 Width	30.0 cm
Package 2 Length	40.0 cm
Package 2 Weight	3.882 kg

Contractual warranty

Warranty	18 months

Sustainability

Green Premium™ label is Schneider Electric's commitment to delivering products with best-in-class environmental performance. Green Premium promises compliance with the latest regulations, transparency on environmental impacts, as well as circular and low-CO_2 products.

Guide to assessing product sustainability is a white paper that clarifies global eco-label standards and how to interpret environmental declarations.

Learn more about Green Premium >

Guide to assess a product's sustainability >

RoHS/REACh

Well-being performance

Reach Free Of Svhc	
Mercury Free	
Rohs Exemption Information	Yes

Certifications & Standards

Eu Rohs Directive	Pro-active compliance (Product out of EU RoHS legal scope) EU RoHS Declaration
China Rohs Regulation	China RoHS declaration
Weee	The product must be disposed on European Union markets following specific waste collection and never end up in rubbish bins
Circularity Profile	End of Life Information

Dimensions Drawings

Racks for Modules Mounting

Dimensions of Modules and Racks

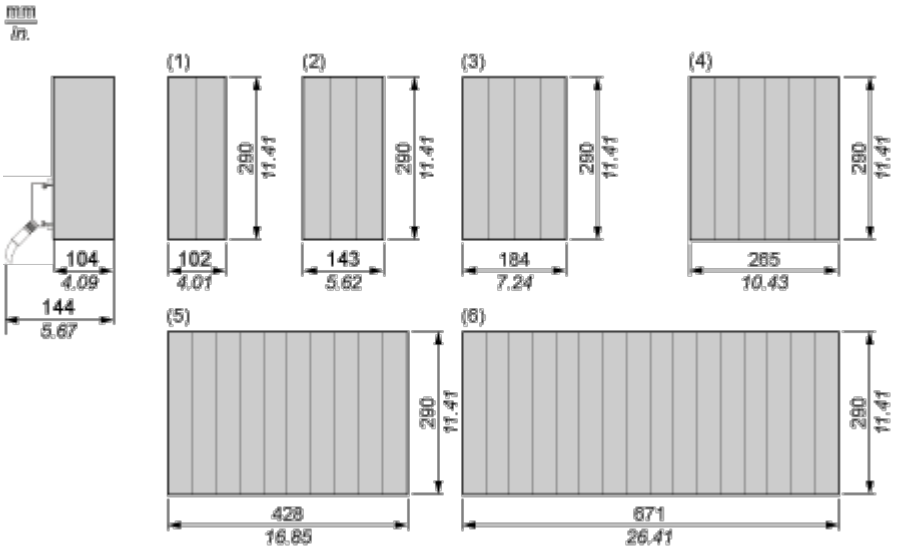

(1) 2 slots

(2) 3 slots

(3) 4 slots

(4) 6 slots

(5) 10 slots

(6) 16 slots

Connections and Schema

24 Vdc Discrete Output Sink Module
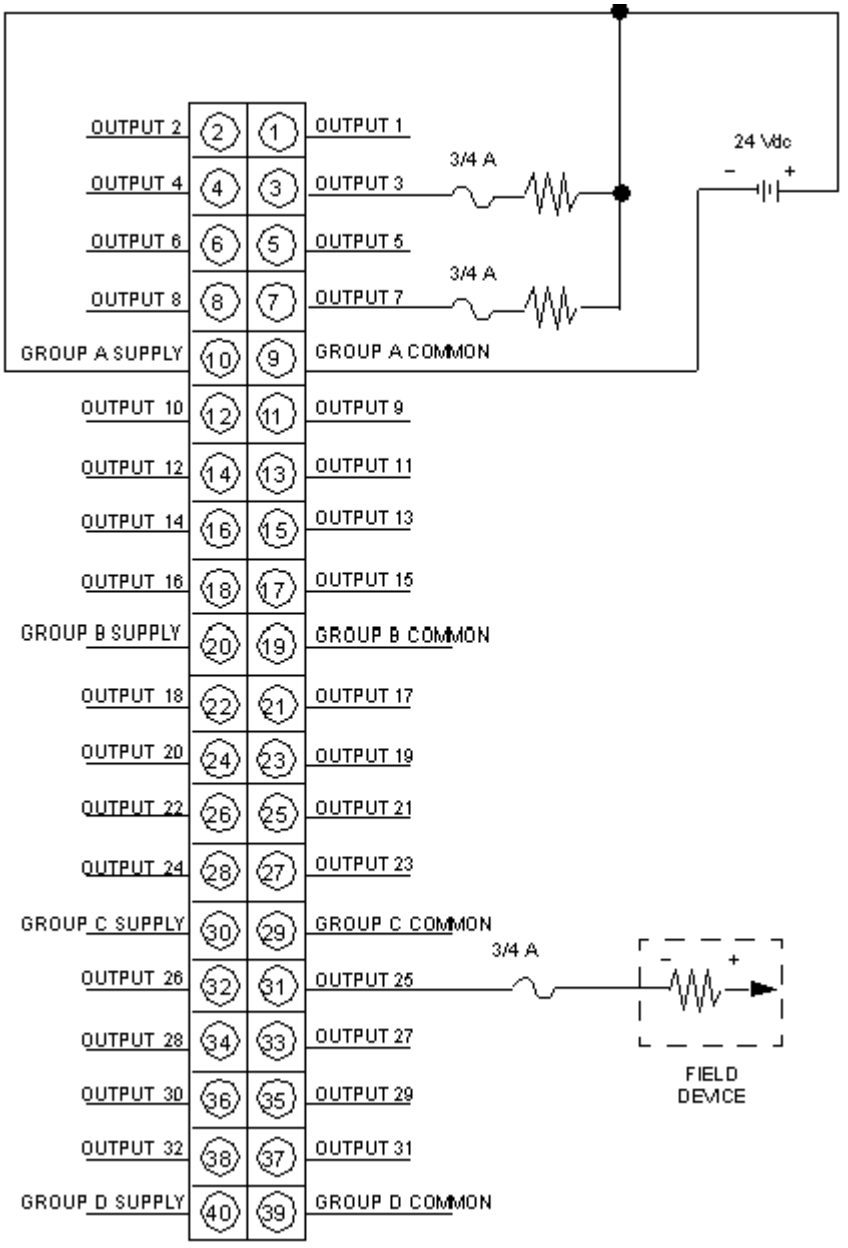
Wiring Diagram