Product datasheet

Specifications

Green Premium™

regulated SMPS, single phase, 100..240 V input, 24 V output, 150 W

ABL1RPM24062

Discontinued on: 23 Jan 2021

Discontinued

Main

Range Of Product	Phaseo Dedicated
Product Or Component Type	Power supply
Power Supply Type	Regulated switch mode
Rated Power In W	150 W
Main Input Voltage	100...120 V AC single phase 200...240 V AC single phase 180...370 V DC
Output Voltage	24 V DC
Power Supply Output Current	6.2 A
Operating Position	Any position
Vibration Resistance	2 gn (f= 9…150 Hz) conforming to EN/IEC 61131-2 3.5 mm (f= 5…9 Hz) conforming to EN/IEC 61131-2
Name Of Test	Conducted interference conforming to EN 61000-4-8 level 4 Electrostatic discharges conforming to EN/IEC 61000-4-2 level 3 Induced electromagnetic field conforming to EN/IEC 61000-4-6 level 3 Radiated electromagnetic field conforming to EN/IEC 61000-4-3 level 3 Rapid transient conforming to IEC 61000-4-4 level 3 Conducted/radiated emissions conforming to EN 55022 class B Conducted/radiated emissions conforming to EN/IEC 55011 Emission conforming to EN/IEC 61000-6-3 Primary outage conforming to IEC 61000-4-11 Surge conforming to EN/IEC 61000-4-5

Complementary

Input Voltage Limits	85...132 V 170...264 V
Network Frequency	47...63 Hz
Inrush Current	50 A at 115 V AC 100 A at 230 V AC
Cos Phi	0.7…0.95
Efficiency	80 %
Power Dissipation In W	37.5 W
Current Consumption	5 A at 100 V 2.5 A at 240 V
Input Protection Type	Integrated fuse (not interchangeable)
Output Voltage Limits	21.6...26.4 V
Line And Load Regulation	+/- 3 %

Excluding VAT and subject to change. Please check with your local distributor through "Where to buy"

Disclaimer: This documentation is not intended as a substitute for and is not to be used for determining suitability or reliability of these products for specific user applications

Holding Time	>= 10 ms at 100 V >= 40 ms at 240 V
Output Protection Type	Against overload, protection technology: 1.1...1.5 x In Against overvoltage, protection technology: tripping if U > 1.25 x Un Against short-circuits, protection technology: automatic reset Thermal
Connections - Terminals	For ground connection: screw type terminals, connection capacity: 1 x 4 mm² AWG 12 For input connection: screw type terminals, connection capacity: 2 x 4 mm² AWG 12 For output connection: screw type terminals, connection capacity: 4 x 4 mm² AWG 12
Marking	CE
Mounting Support	Reversible mounting bracket Panel
Operating Altitude	2000 m
Output Coupling	Series Parallel
Overvoltage Category	II
Meantime Between Failure [Mtbf]	100000 h at 40 °C
Status Led	1 LED (green) output voltage
Net Weight	0.97 kg

Environment

Product Certifications	EAC KC CSA 22-2 No 60950-1 RCM TUV 60950-1 UL 508 cCSAus
Environmental Characteristic	EMC conforming to EN 50081-1 EMC conforming to EN 50082-2 EMC conforming to EN 61000-6-3 EMC conforming to EN/IEC 61000-6-2 Safety conforming to EN/IEC 60950-1 Safety conforming to SELV Low frequency harmonic currents conforming to EN/IEC 61000-3-2
Ip Degree Of Protection	IP20 conforming to EN/IEC 60950
Ambient Air Temperature For Operation	0…45 °C (without derating) 45…60 °C (with derating factor)
Ambient Air Temperature For Storage	-25…85 °C
Relative Humidity	20…90 %
Overvoltage Category	Class I conforming to VDE 0106-1
Pollution Degree	2
Dielectric Strength	1500 V between input and ground 3000 V between input and output 500 V between output and ground

Packing Units

Unit Type Of Package 1	PCE
Number Of Units In Package 1	1
Package 1 Height	6.6 cm
Package 1 Width	23.5 cm
Package 1 Length	11.8 cm

Package 1 Weight	1.128 kg

Contractual warranty

Warranty	18 months

Sustainability

Green Premium™ label is Schneider Electric's commitment to delivering products with best-in-class environmental performance. Green Premium promises compliance with the latest regulations, transparency on environmental impacts, as well as circular and low-CO_2 products.

Guide to assessing product sustainability is a white paper that clarifies global eco-label standards and how to interpret environmental declarations.

Learn more about Green Premium >

Guide to assess a product's sustainability >

Transparency RoHS/REACh

Well-being performance

Mercury Free	
Rohs Exemption Information	Yes
Pvc Free	

Certifications & Standards

Reach Regulation	REACh Declaration
Eu Rohs Directive	Pro-active compliance (Product out of EU RoHS legal scope)
China Rohs Regulation	China RoHS declaration
Environmental Disclosure	Product Environmental Profile
Circularity Profile	End of Life Information

Dimensions Drawings

Dimensions

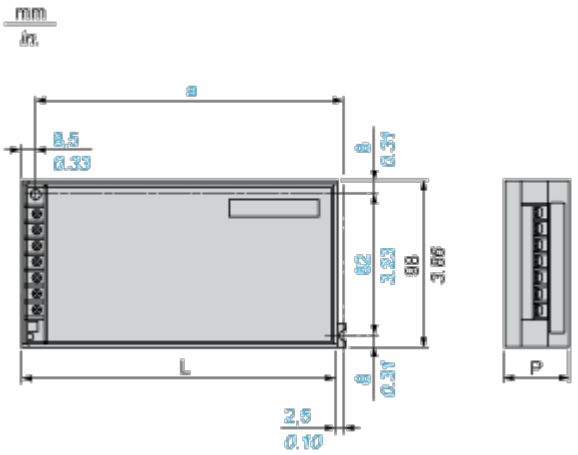

Dimensions in mm

a	L	P
194	200	50

Dimensions in in.

a	L	P
7.64	7.87	1.97

Mounting and Clearance

Clearance

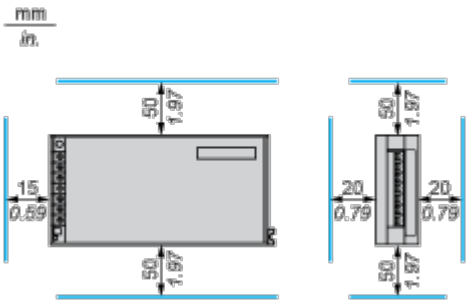

Mounting Way

Mounting on Vertical Plane

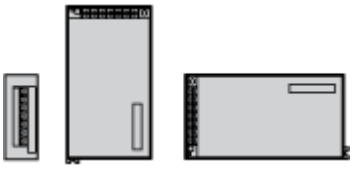

Mounting on Horizontal Plane

Direct Mounting by 2 M4 x 20 Screws

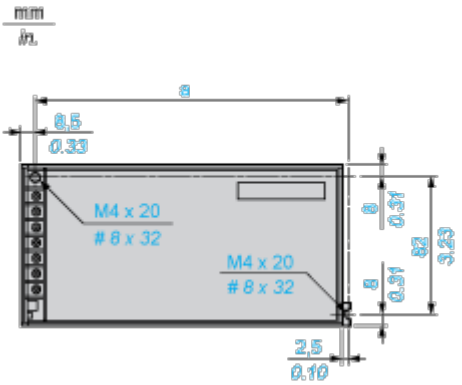

Dimensions in mm

a
194

Dimensions in in

a
7.64

Mounting on the Back on ABL 1A01 Reversible Bracket by Three 4 mm Diameter Screws

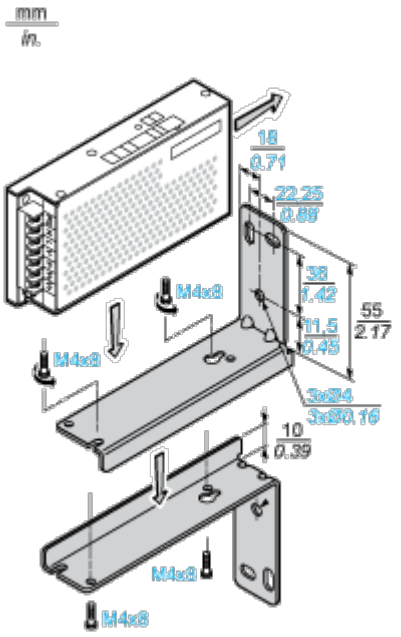

Mounting on ABL 1A02 Clip-on Mounting on 35 mm Rail

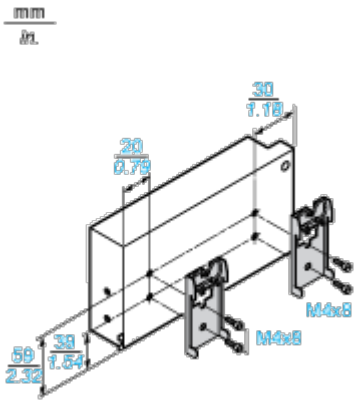

Mounting by the Back

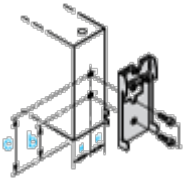

Dimensions in mm

b	c
28	48

Dimensions in in.

b	c
1.10	1.89

Connections and Schema

Internal Wiring Diagram

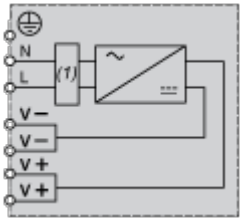

(1) Filter

Series or Parallel Connection

Series Connection

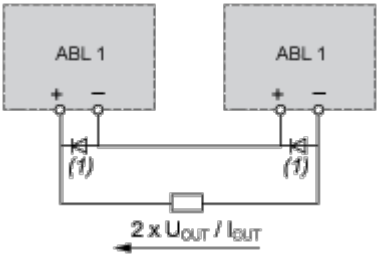

Parallel Connection

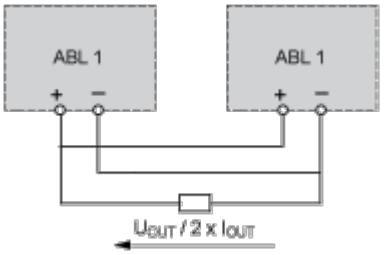

(1) 15 A/100 V Shottky diode

Performance Curves

Derating Curves

Mounting on Vertical Plane

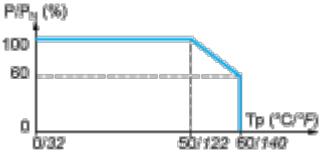

Mounting on Horizontal Plane

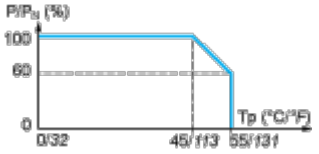
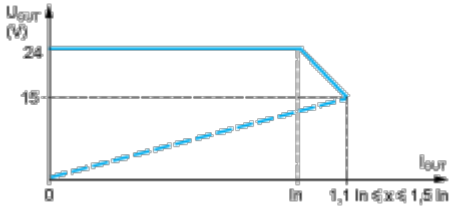
Load Limits Curve