# Product datasheet

Specifications

## variable speed drive ATV310. 3 kW. 4 hp. 380...460 V. 3 phase

ATV310HU30N4E

**Price: 11,110.45 ZAR**

## Main

| | |
|---|---|
| **Range Of Product** | Easy Altivar 310 |
| **Product Or Component Type** | Variable speed drive |
| **Product Specific Application** | Simple machine |
| **Assembly Style** | With heat sink |
| **Device Short Name** | ATV310 |
| **Network Number Of Phases** | Three phase |
| **[Us] Rated Supply Voltage** | 380...460 V - 15...10 % |
| **Motor Power Kw** | 3 kW for heavy duty<br>4 kW for normal duty |
| **Motor Power Hp** | 4 hp for heavy duty<br>5 hp for normal duty |
| **Noise Level** | 50 dB |

## Complementary

| | |
|---|---|
| **Quantity Per Set** | Set of 1 |
| **Emc Filter** | Without EMC filter |
| **Type Of Cooling** | Integrated fan |
| **Communication Port Protocol** | Modbus |
| **Connector Type** | RJ45 (on front face) for Modbus |
| **Physical Interface** | 2-wire RS 485 for Modbus |
| **Transmission Frame** | RTU for Modbus |
| **Transmission Rate** | 4800 bit/s<br>9600 bit/s<br>19200 bit/s<br>38400 bit/s |
| **Number Of Addresses** | 1…247 for Modbus |
| **Communication Service** | Read holding registers (03) 29 words<br>Write single register (06) 29 words<br>Write multiple registers (16) 27 words<br>Read/write multiple registers (23) 4/4 words<br>Read device identification (43) |
| **Line Current** | 11.1 A at 380 V (heavy duty)<br>14.2 A at 380 V (normal duty)<br>9.2 A at 460 V (heavy duty)<br>11.6 A at 460 V (normal duty) |
| **Apparent Power** | 7.3 kVA at 460 V (heavy duty)<br>9.3 kVA at 460 V (normal duty) |

Excluding VAT and subject to change. Please check with your local distributor through "Where to buy"

Disclaimer: This documentation is not intended as a substitute for and is not to be used for determining suitability or reliability of these products for specific user applications

| | |
|---|---|
| **Prospective Line Isc** | 5 kA ( heavy duty )<br>5 kA ( normal duty ) |
| **Continuous Output Current** | 7.1 A heavy duty<br>8.9 A normal duty |
| **Maximum Transient Current** | 10.7 A during 60 s (heavy duty)<br>9.8 A during 60 s (normal duty) |
| **Power Dissipation In W** | 90.8 W, at In (heavy duty)<br>120.4 W, at In (normal duty) |
| **Speed Drive Output Frequency** | 0.5…400 Hz |
| **Nominal Switching Frequency** | 4 kHz |
| **Switching Frequency** | 2...12 kHz adjustable |
| **Speed Range** | 1…20 for asynchronous motor |
| **Transient Overtorque** | 170…200 % of nominal motor torque depending on drive rating and type of motor |
| **Braking Torque** | Up to 150 % of nominal motor torque with braking resistor<br>Up to 70 % of nominal motor torque without braking resistor |
| **Asynchronous Motor Control Profile** | Voltage/frequency ratio (V/f)<br>Voltage/frequency ratio - Energy Saving, quadratic U/f<br>Sensorless vector control (SVC) |
| **Motor Slip Compensation** | Adjustable |
| **Output Voltage** | 380...460 V three phase |
| **Electrical Connection** | Terminal, clamping capacity: 1.5...4 mm², AWG 16...AWG 12 (L1, L2, L3, PA/+, PB, U, V, W) |
| **Tightening Torque** | 1.2…1.4 N.m |
| **Insulation** | Electrical between power and control |
| **Supply** | Internal supply for reference potentiometer: 5 V (4.75…5.25 V)DC, <10 mA with overload and short-circuit protection<br>Internal supply for logic inputs: 24 V (20.4…28.8 V)DC, <100 mA with overload and short-circuit protection |
| **Analogue Input Number** | 1 |
| **Analogue Input Type** | Configurable current AI1 0...20 mA 250 Ohm<br>Configurable voltage AI1 0...10 V 30 kOhm<br>Configurable voltage AI1 0...5 V 30 kOhm |
| **Discrete Input Number** | 4 |
| **Discrete Input Type** | Programmable LI1...LI4 24 V 18...30 V |
| **Discrete Input Logic** | Negative logic (sink), > 16 V (state 0), < 10 V (state 1), input impedance 3.5 kOhm<br>Positive logic (source), 0...< 5 V (state 0), > 11 V (state 1) |
| **Sampling Duration** | 10 ms for analogue input<br>20 ms, tolerance +/- 1 ms for logic input |
| **Linearity Error** | +/- 0.3 % of maximum value for analogue input |
| **Analogue Output Number** | 1 |
| **Analogue Output Type** | AO1 software-configurable voltage: 0...10 V AC 0...10 V 0…0.02 A, impedance: 470 Ohm, resolution 8 bits<br>AO1 software-configurable current: 0...20 mA, impedance: 800 Ohm, resolution 8 bits |
| **Discrete Output Number** | 2 |
| **Discrete Output Type** | Logic output LO+, LO-<br>Protected relay output R1A, R1B, R1C 1 C/O |
| **Minimum Switching Current** | 5 mA at 24 V DC for logic relay |
| **Maximum Switching Current** | 2 A at 250 V AC on inductive load cos phi = 0.4 L/R = 7 ms for logic relay<br>2 A at 30 V DC on inductive load cos phi = 0.4 L/R = 7 ms for logic relay<br>3 A at 250 V AC on resistive load cos phi = 1 L/R = 0 ms for logic relay<br>4 A at 30 V DC on resistive load cos phi = 1 L/R = 0 ms for logic relay |

| | |
|---|---|
| **Acceleration And Deceleration Ramps** | Linear from 0...999.9 s<br>S<br>U |
| **Braking To Standstill** | By DC injection, <30 s |
| **Protection Type** | Line supply overvoltage<br>Line supply undervoltage<br>Overcurrent between output phases and earth<br>Overheating protection<br>Short-circuit between motor phases<br>Against input phase loss in three-phase<br>Thermal motor protection via the drive by continuous calculation of $I^2t$ |
| **Frequency Resolution** | Analog input: converter A/D, 10 bits<br>Display unit: 0.1 Hz |
| **Time Constant** | 20 ms +/- 1 ms for reference change |
| **Operating Position** | Vertical +/- 10 degree |
| **Height** | 184 mm |
| **Width** | 140 mm |
| **Depth** | 151 mm |
| **Net Weight** | 1.8 kg |
| **Supply Frequency** | 50/60 Hz +/- 5 % |
| **Product Destination** | Asynchronous motors |

# Environment

| | |
|---|---|
| **Electromagnetic Compatibility** | Electrical fast transient/burst immunity test - test level: level 4 conforming to IEC 61000-4-4<br>Electrostatic discharge immunity test - test level: level 3 conforming to IEC 61000-4-2<br>Immunity to conducted disturbances - test level: level 3 conforming to IEC 61000-4-6<br>Radiated radio-frequency electromagnetic field immunity test - test level: level 3 conforming to IEC 61000-4-3<br>Voltage dips and interruptions immunity test conforming to IEC 61000-4-11<br>Surge immunity test - test level: level 3 conforming to IEC 61000-4-5 |
| **Standards** | IEC 61800-3 |
| **Product Certifications** | CE<br>EAC<br>KC |
| **Ip Degree Of Protection** | IP20 without blanking plate on upper part<br>IP4X top |
| **Pollution Degree** | 2 conforming to IEC 61800-5-1 |
| **Environmental Characteristic** | Dust pollution resistance class 3S2 conforming to IEC 60721-3-3<br>Chemical pollution resistance class 3C3 conforming to IEC 60721-3-3 |
| **Shock Resistance** | 15 gn conforming to IEC 60068-2-27 for 11 ms |
| **Relative Humidity** | 5…95 % without condensation conforming to IEC 60068-2-3<br>5…95 % without dripping water conforming to IEC 60068-2-3 |
| **Ambient Air Temperature For Storage** | -25…70 °C |
| **Ambient Air Temperature For Operation** | -10…55 °C without derating<br>55…60 °C protective cover from the top of the drive removed with current derating<br>2.2 % per °C |
| **Operating Altitude** | <= 1000 m without derating |

# Packing Units

| | |
|---|---|
| **Unit Type Of Package 1** | PCE |
| **Number Of Units In Package 1** | 1 |

| | |
|---|---|
| **Package 1 Height** | 19.000 cm |
| **Package 1 Width** | 18.500 cm |
| **Package 1 Length** | 23.000 cm |
| **Package 1 Weight** | 2.100 kg |
| **Unit Type Of Package 2** | S03 |
| **Number Of Units In Package 2** | 2 |
| **Package 2 Height** | 30.000 cm |
| **Package 2 Width** | 30.000 cm |
| **Package 2 Length** | 40.000 cm |
| **Package 2 Weight** | 4.776 kg |

## Sustainability

**Green Premium™ label** is Schneider Electric's commitment to delivering products with best-in-class environmental performance. Green Premium promises compliance with the latest regulations, transparency on environmental impacts, as well as circular and low-$CO_2$ products.

**Guide to assessing product sustainability** is a white paper that clarifies global eco-label standards and how to interpret environmental declarations.

Learn more about Green Premium >

Guide to assess a product's sustainability >

Transparency RoHS/REACh

## Well-being performance

Mercury Free

| | |
|---|---|
| Rohs Exemption Information | Yes |

## Certifications & Standards

| | |
|---|---|
| **Reach Regulation** | REACh Declaration |
| **Eu Rohs Directive** | Compliant with Exemptions |
| **China Rohs Regulation** | China RoHS declaration |
| **Environmental Disclosure** | Product Environmental Profile |
| **Weee** | The product must be disposed on European Union markets following specific waste collection and never end up in rubbish bins |
| **Circularity Profile** | End of Life Information |

## Dimensions Drawings

### Dimensions

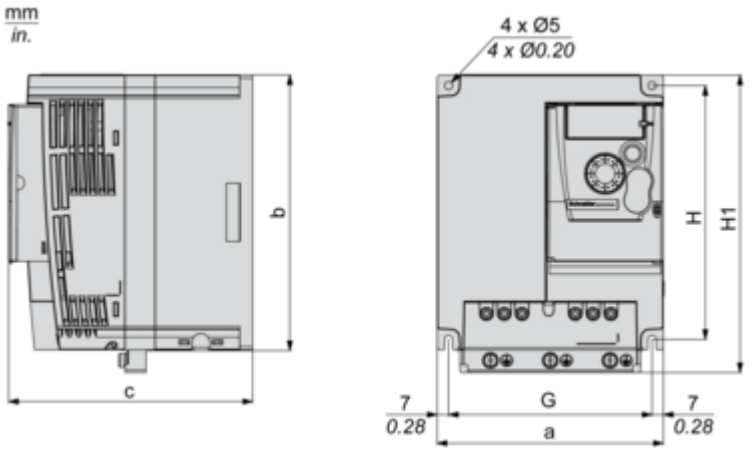


Dimensions in mm

| a | b | c | G | H | H1 | Ø | For screws |
|---|---|---|---|---|---|---|---|
| 140 | 171 | 151 | 126 | 157 | 184 | 5 | M4 |

Dimensions in in.

| a | b | c | G | H | H1 | Ø | For screws |
|---|---|---|---|---|---|---|---|
| 5.51 | 6.73 | 5.94 | 4.96 | 6.18 | 7.24 | 0.20 | M4 |

## Mounting and Clearance

### Mounting Recommendations

#### Clearance

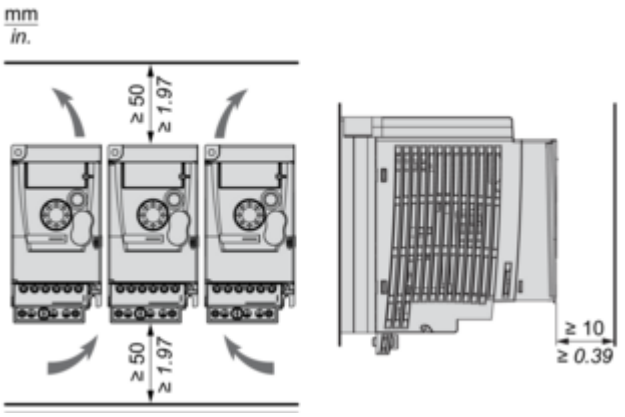


#### Mounting Types

Mounting Type A

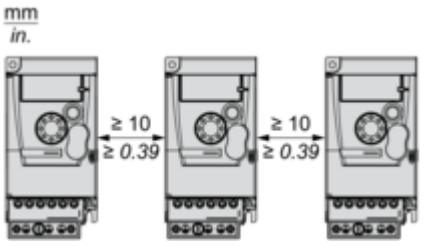


Mounting Type B

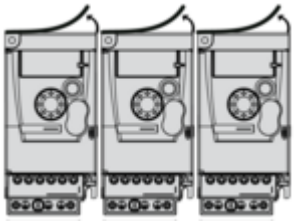

Remove the protective cover from the top of the drive.

## Connections and Schema

### Three-Phase Power Supply Wiring Diagram

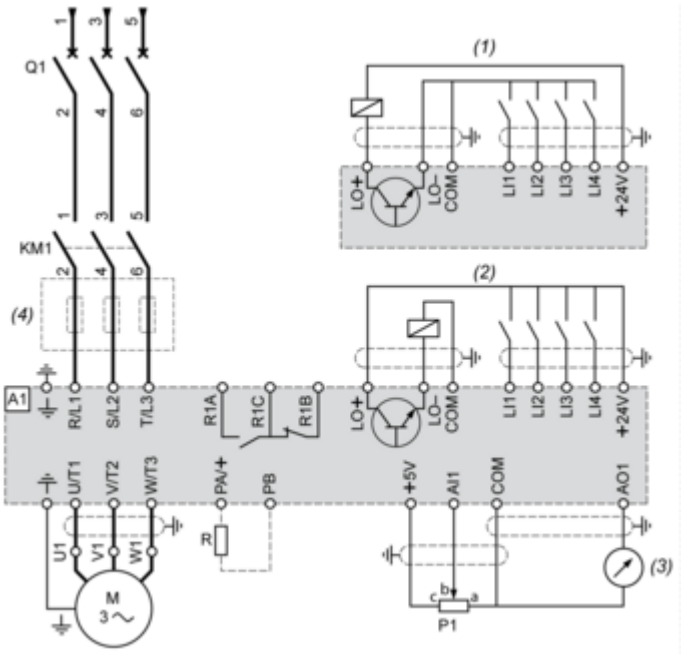


**A1 :** Drive
**KM1 :** Contactor (only if a control circuit is needed)
**P1 :** 2.2 kΩ reference potentiometer. This can be replaced by a 10 kΩ potentiometer (maximum).
**Q1 :** Circuit breaker
**R :** Braking resistor (optional)
**(1)** Negative logic (Sink)
**(2)** Positive logic (Source) (factory set configuration)
**(3)** 0...10 V or 0...20 mA
**(4)** Line choke three-phase (optional)