Product datasheet

Specifications

Green Premium™

Motor circuit breaker. TeSys GV2. 3P. 0.1-0.16 A. thermal magnetic. screw clamp terminals

GV2P01

Price: 1,141.36 ZAR

Main

Range	TeSys Deca
Product Name	TeSys GV2 TeSys Deca
Product Or Component Type	Motor circuit breaker
Device Short Name	GV2P
Device Application	Motor protection
Trip Unit Technology	Thermal-magnetic

Complementary

Poles Description	3P
Network Type	AC
Utilisation Category	Category A conforming to IEC 60947-2 AC-3 conforming to IEC 60947-4-1 AC-3e conforming to IEC 60947-4-1
Network Frequency	50/60 Hz conforming to IEC 60947-4-1
Fixing Mode	35 mm symmetrical DIN rail: clipped Panel: screwed (with 2 x M4 screws)
Breaking Capacity	100 kA Icu at 230/240 V AC 50/60 Hz conforming to IEC 60947-2 100 kA Icu at 400/415 V AC 50/60 Hz conforming to IEC 60947-2 100 kA Icu at 440 V AC 50/60 Hz conforming to IEC 60947-2 100 kA Icu at 500 V AC 50/60 Hz conforming to IEC 60947-2 100 kA Icu at 690 V AC 50/60 Hz conforming to IEC 60947-2
[Ics] Rated Service Short-Circuit Breaking Capacity	100 % at 230/240 V AC 50/60 Hz conforming to IEC 60947-2 100 % at 400/415 V AC 50/60 Hz conforming to IEC 60947-2 100 % at 440 V AC 50/60 Hz conforming to IEC 60947-2 100 % at 500 V AC 50/60 Hz conforming to IEC 60947-2 100 % at 690 V AC 50/60 Hz conforming to IEC 60947-2
Control Type	Rotary handle
[In] Rated Current	0.16 A
Thermal Protection Adjustment Range	0.1…0.16 A conforming to IEC 60947-4-1
Magnetic Tripping Current	1.5 A
[Ith] Conventional Free Air Thermal Current	0.16 A conforming to IEC 60947-4-1
[Ue] Rated Operational Voltage	690 V AC 50/60 Hz conforming to IEC 60947-2
[Ui] Rated Insulation Voltage	690 V AC 50/60 Hz conforming to IEC 60947-2
[Uimp] Rated Impulse Withstand Voltage	6 kV conforming to IEC 60947-2
Phase Failure Sensitivity	Yes conforming to IEC 60947-4-1
Suitability For Isolation	Yes conforming to IEC 60947-1 § 7-1-6

Excluding VAT and subject to change. Please check with your local distributor through "Where to buy"

Disclaimer: This documentation is not intended as a substitute for and is not to be used for determining suitability or reliability of these products for specific user applications

Power Dissipation Per Pole	2.5 W
Mechanical Durability	100000 cycles
Electrical Durability	100000 cycles for AC-3 at 415 V In 100000 cycles for AC-3e at 415 V In
Rated Duty	Continuous conforming to IEC 60947-4-1
Tightening Torque	1.7 N.m - on screw clamp terminal
Width	45 mm
Height	89 mm
Depth	97 mm
Colour	Dark grey

Environment

Standards	EN/IEC 60947-2 EN/IEC 60947-4-1
Product Certifications	CCC UL CSA EAC ATEX LROS (Lloyds register of shipping) BV RINA DNV-GL UKCA
Ik Degree Of Protection	IK04
Ip Degree Of Protection	IP20 conforming to IEC 60529
Climatic Withstand	conforming to IACS E10
Ambient Air Temperature For Storage	-40…80 °C
Fire Resistance	960 °C conforming to IEC 60695-2-11
Ambient Air Temperature For Operation	-20…60 °C
Mechanical Robustness	Shocks: 30 Gn for 11 ms Vibrations: 5 Gn, 5...150 Hz
Operating Altitude	2000 m

Packing Units

Unit Type Of Package 1	PCE
Number Of Units In Package 1	1
Package 1 Height	4.500 cm
Package 1 Width	9.400 cm
Package 1 Length	10.000 cm
Package 1 Weight	264.000 g
Unit Type Of Package 2	S02
Number Of Units In Package 2	20
Package 2 Height	15.000 cm
Package 2 Width	30.000 cm
Package 2 Length	40.000 cm
Package 2 Weight	5.550 kg

Unit Type Of Package 3	P06
Number Of Units In Package 3	320
Package 3 Height	75.000 cm
Package 3 Width	60.000 cm
Package 3 Length	80.000 cm
Package 3 Weight	98.500 kg

Contractual warranty

Warranty	18 months

Sustainability

Green Premium™ label is Schneider Electric's commitment to delivering products with best-in-class environmental performance. Green Premium promises compliance with the latest regulations, transparency on environmental impacts, as well as circular and low-CO_2 products.

Guide to assessing product sustainability is a white paper that clarifies global eco-label standards and how to interpret environmental declarations.

Learn more about Green Premium >

Guide to assess a product's sustainability >

Transparency RoHS/REACh

Well-being performance

Rohs Exemption Information	Yes

Certifications & Standards

Reach Regulation	REACh Declaration
Eu Rohs Directive	Compliant with Exemptions
China Rohs Regulation	China RoHS declaration Product out of China RoHS scope. Substance declaration for your information
Environmental Disclosure	Product Environmental Profile
Weee	The product must be disposed on European Union markets following specific waste collection and never end up in rubbish bins
Circularity Profile	End of Life Information

Performance Curves

Thermal-Magnetic Tripping Curves for GV2ME and GV2P

Average Operating Times at 20 °C Related to Multiples of the Setting Current

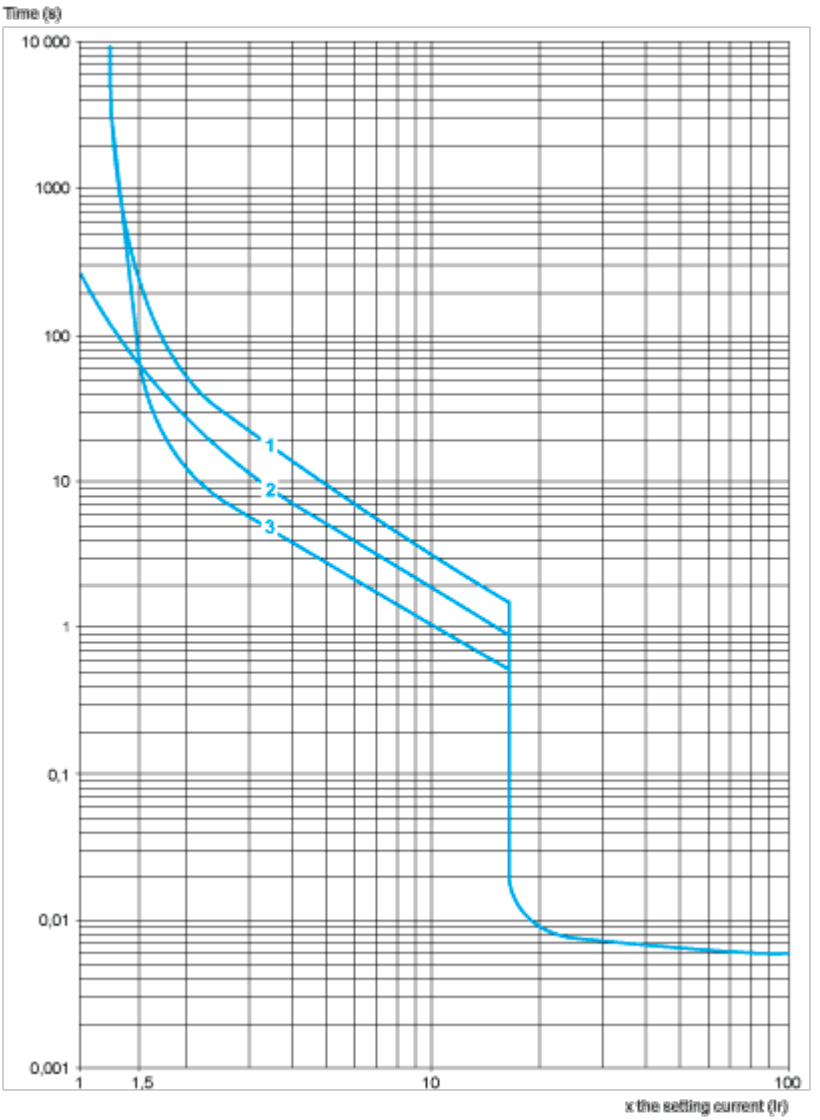

1 3 poles from cold state

2 2 poles from cold state

3 3 poles from hot state

Current Limitation on Short-Circuit for GV2ME and GV2P (3-Phase 400/415 V))

Dynamic Stress

I peak = f (prospective Isc) at 1.05 Ue = 435 V

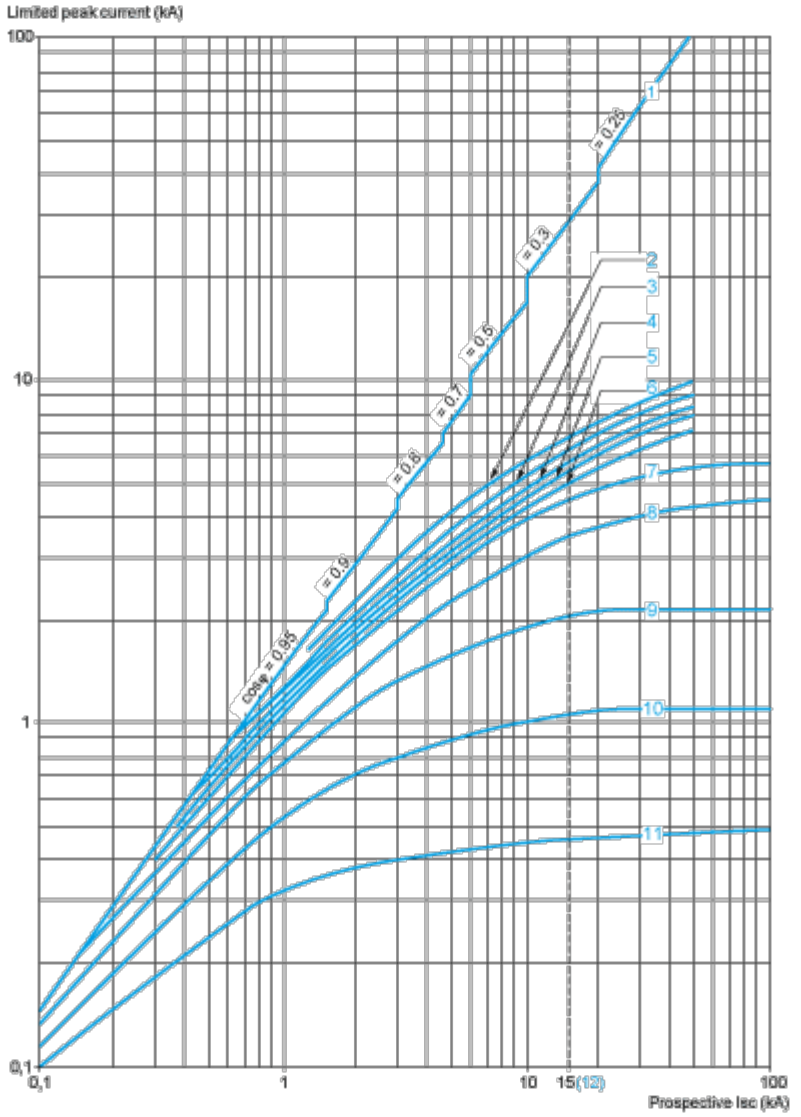

1 Maximum peak current

2 24-32 A

3 20-25 A

4 17-23 A

5 13-18 A

6 9-14 A

7 6-10 A

8 4-6.3 A

9 2.5-4 A

10 1.6-2.5 A

11 1-1.6 A

12 Limit of rated ultimate breaking capacity on short-circuit of GV2ME (14, 18, 23, and 25 A ratings).

Thermal Limit on Short-Circuit for GV2P

Thermal Limit in kA^2s in the Magnetic Operating Zone

Sum of I^2dt = f (prospective Isc) at 1.05 Ue = 435 V

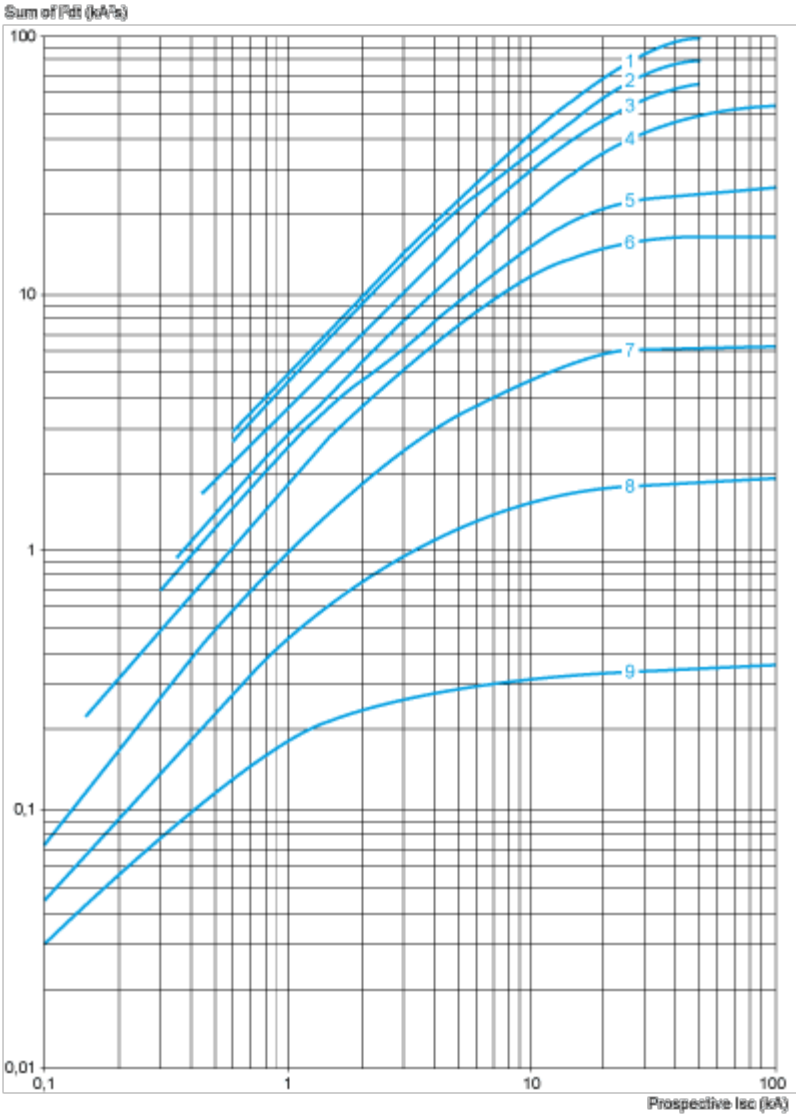

1 24-32 A

2 20-25 A

3 17-23 A

4 13-18 A

5 9-14 A

6 6-10 A

7 4-6.3 A

8 2.5-4 A

9 1.6-2.5 A

10 1-1.6 A

Dimensions Drawings

GV2P

On rail AM1 DE200, ED200 (35 x 15)

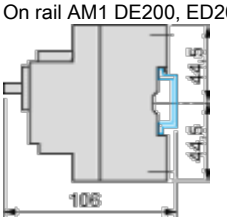

Panel mounted

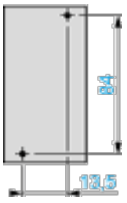

On pre-slotted plate AM1 PA

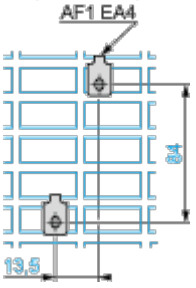

Adapter plate GK2AF01

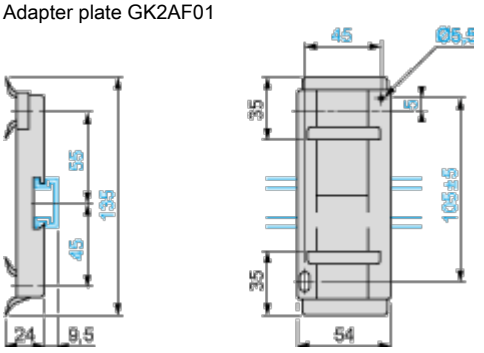

Combination GV2P + TeSys d contactor

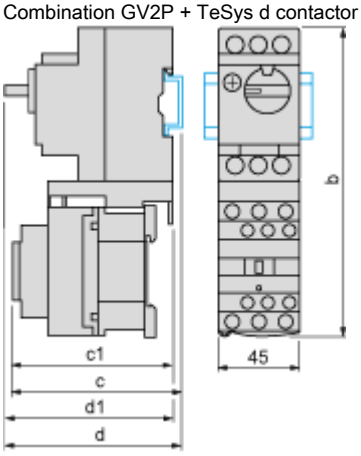

GV2P +	LC1D09…D18	LC1D25 and D32
b	176.4	186.8
c1	100.1	106.4
c	105.6	111.9
d1	95	95
d	100.5	100.5

Mounting

Mounting of External Operator GV2APN01, GV2APN02 or GV2APN04 for Motor Circuit Breakers GV2P

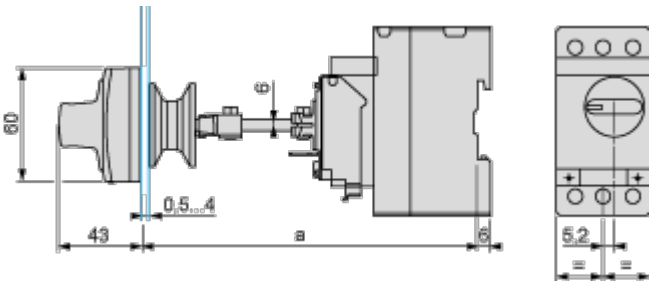

Door cut-out

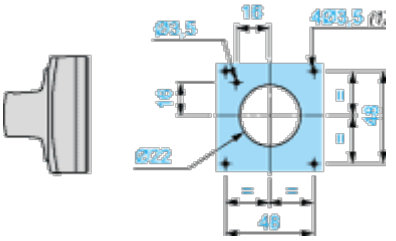

(1) For IP65 only.

Mounting of External Operator GVAPH02 for Motor Circuit Breakers GV2P

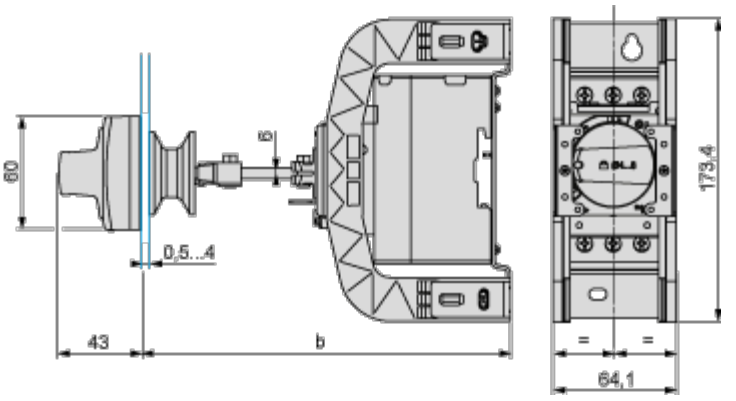

	a		b	
	Minimum	Maximum	Minimum	Maximum
GV2APN••	140	250	–	–
GV2APN•• + GVAPH02	–	–	151	250

	a		b	
	Minimum	Maximum	Minimum	Maximum
GV2APN•• + GVAPK11	250	434	–	–
GV2APN•• + GVAPH02 + GVAPK11	–	–	250	445

Door cut-out

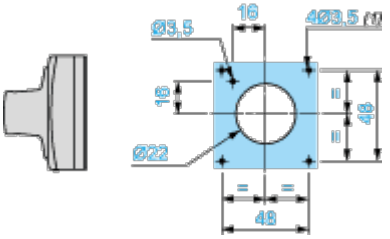

(1) For IP65 only.

Connections and Schema
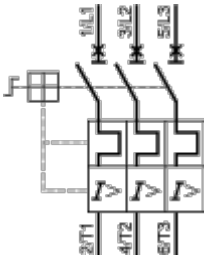
GV2P••