Product datasheet

Specifications

Arc accessory VA1DA-6S Arc sensor 6m shielded

REL52806

Price: 1,507.67 ZAR

Main

Range Of Product	Easergy P3
Product Or Component Type	Arc sensor
Type Of Cable	Shielded cable
Quantity Pack	1 piece
Light Spectrum Sensitivity Area	400…1100 nm

Complementary

Cable Length	6 m
Width	55 mm
Height	25 mm
Depth	14 mm
Net Weight	0.3 kg

Environment

Pollution Degree	2
Ambient Air Temperature For Operation	-25…70 °C

Packing Units

Unit Type Of Package 1	PCE
Number Of Units In Package 1	1
Package 1 Height	3.0 cm
Package 1 Width	6.3 cm
Package 1 Length	14.6 cm
Package 1 Weight	100.0 g

Disclaimer: This documentation is not intended as a substitute for and is not to be used for determining suitability or reliability of these products for specific user applications

Excluding VAT and subject to change. Please check with your local distributor through "Where to buy"

Sustainability

Green Premium™ label is Schneider Electric's commitment to delivering products with best-in-class environmental performance. Green Premium promises compliance with the latest regulations, transparency on environmental impacts, as well as circular and low-CO_2 products.

Guide to assessing product sustainability is a white paper that clarifies global eco-label standards and how to interpret environmental declarations.

Learn more about Green Premium >

Guide to assess a product's sustainability >

Transparency RoHS/REACh

Well-being performance

Reach Free Of Svhc	
Mercury Free	
Rohs Exemption Information	Yes

Certifications & Standards

Reach Regulation	REACh Declaration
Eu Rohs Directive	Compliant with Exemptions
China Rohs Regulation	China RoHS declaration
Environmental Disclosure	Product Environmental Profile
Weee	The product must be disposed on European Union markets following specific waste collection and never end up in rubbish bins
Circularity Profile	End of Life Information

Dimensions Drawings

Arc Flash Sensors

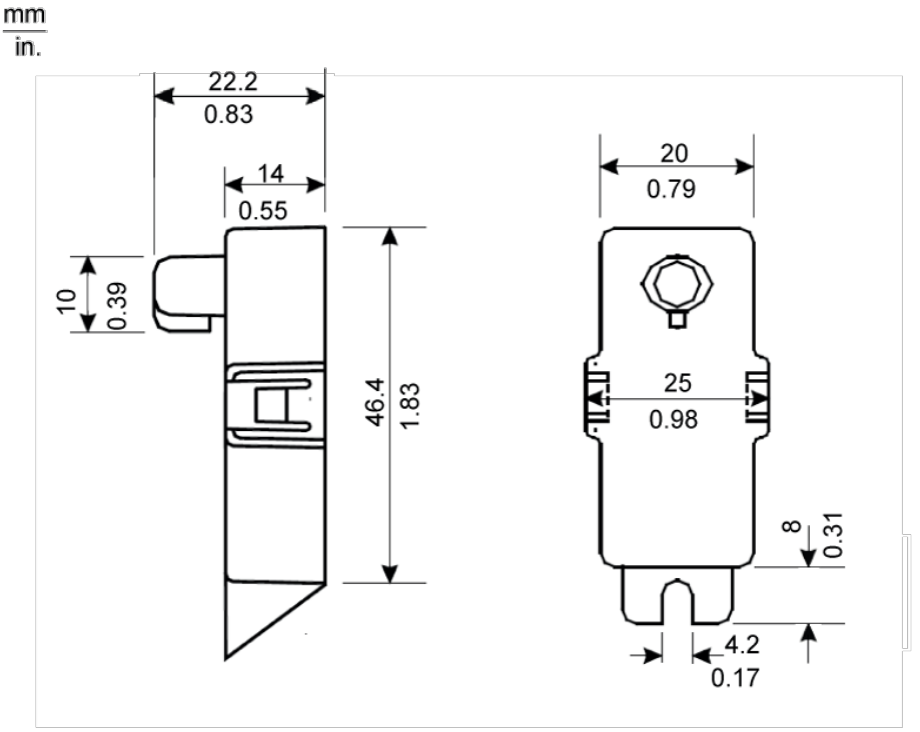
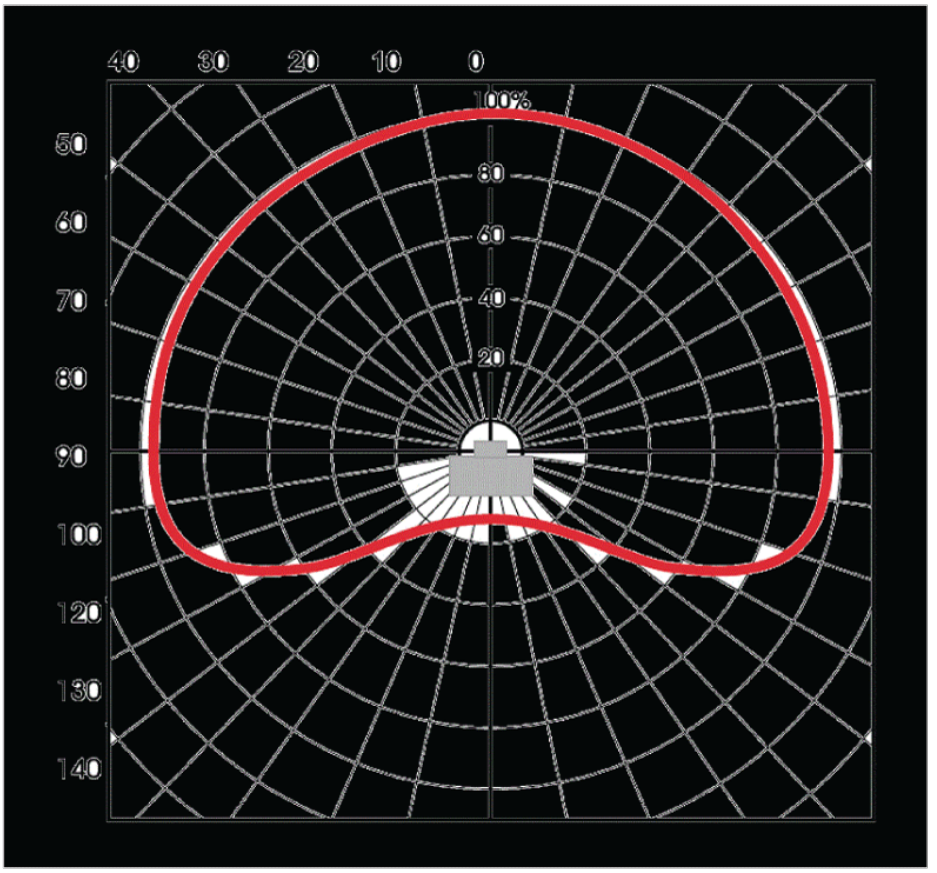
Arc Flash Sensors: Sensitivity Area