Product datasheet

Specifications

small panel with keypad - with matrix screen - G-O-R - 24 V

XBTN401

Discontinued on: 15 Dec 2021

To be end-of-service on: 30 Jun 2029

Discontinued - Service only

Price: 9,425.34 ZAR

Main

Range Of Product	Magelis XBTN
Product Or Component Type	Small panel with keypad
Display Resolution	122 x 32 pixels
Software Type	Configuration software
Software Designation	Vijeo Designer Lite
Operating System	Magelis

Complementary

Display Type	Extra-bright matrix backlit LCD
Display Colour	Red Green Orange
Character Font	ASCII Katakana Chinese (simplified Chinese) Greek Cyrillic
[Us] Rated Supply Voltage	24 V DC
Supply	External source
Supply Voltage Limits	18…30 V
Residual Ripple	1200 mV
Power Consumption In W	5 W
Number Of Key	8
Number Of Fixed Keys	4
Number Of Customisable Keys	4
Local Signalling	6 LEDs
Number Of Pages	256 alarm pages 200 application pages
Memory Type	Flash
Memory Capacity	512 KB
Integrated Connection Type	Power supply: removable screw terminal block Printer port: female mini DIN Serial link: female SUB-D 25, asynchronous transmission mode (RS232C/ RS485)multidrop topology
Realtime Clock	Access to the PLC real-time clock

Excluding VAT and subject to change. Please check with your local distributor through "Where to buy"

Disclaimer: This documentation is not intended as a substitute for and is not to be used for determining suitability or reliability of these products for specific user applications

Product Mounting	Flush mounting
Fixing Mode	By 2 spring clips
Display Material	Polyester
Front Material	PPT
Keypad Material	Polyester
Marking	CE
Width	132 mm
Height	74 mm
Depth	43 mm
Cut-Out Dimensions	119.4 (+/- 0.5) x 63 (+/- 0.4) mm
Net Weight	0.38 kg

Environment

Messages Display Capacity	4 lines of 20 characters maximum 1 line of 5 characters minimum
Downloadable Protocols	Uni-TE Modbus Third party protocols
Standards	IEC 60068-2-6 IEC 61131-2 CSA C22.2 No 14 IEC 60068-2-27 UL 508
Product Certifications	UL 1604 ATEX zone 2/22 CSA Class 1 Division 2 UL Class 1 Division 2
Ambient Air Temperature For Operation	0…55 °C
Ambient Air Temperature For Storage	-20…60 °C
Relative Humidity	0…85 % without condensation
Ip Degree Of Protection	IP20 (rear panel) conforming to IEC 60529 IP65 (front panel) conforming to IEC 60529
Nema Degree Of Protection	NEMA 4X front panel (outdoor use)
Shock Resistance	15 gn for 11 ms
Vibration Resistance	+/- 3.5 mm (f = 2…8.45 Hz) 1 gn (f = 8.45…150 Hz)

Packing Units

Unit Type Of Package 1	PCE
Number Of Units In Package 1	1
Package 1 Height	4.5 cm
Package 1 Width	16.2 cm
Package 1 Length	23.5 cm
Package 1 Weight	440.0 g
Unit Type Of Package 2	S03
Number Of Units In Package 2	11
Package 2 Height	30.0 cm

Package 2 Width	30.0 cm
Package 2 Length	40.0 cm
Package 2 Weight	5.495 kg

Contractual warranty

Warranty	18 months

Sustainability

Green Premium™ label is Schneider Electric's commitment to delivering products with best-in-class environmental performance. Green Premium promises compliance with the latest regulations, transparency on environmental impacts, as well as circular and low-CO_2 products.

Guide to assessing product sustainability is a white paper that clarifies global eco-label standards and how to interpret environmental declarations.

Learn more about Green Premium >

Guide to assess a product's sustainability >

Well-being performance

Reach Free Of Svhc	
Mercury Free	
Rohs Exemption Information	Yes

Reach Regulation	REACh Declaration
Eu Rohs Directive	Pro-active compliance (Product out of EU RoHS legal scope)
China Rohs Regulation	China RoHS declaration
Weee	The product must be disposed on European Union markets following specific waste collection and never end up in rubbish bins

Dimensions Drawings

Dimensions

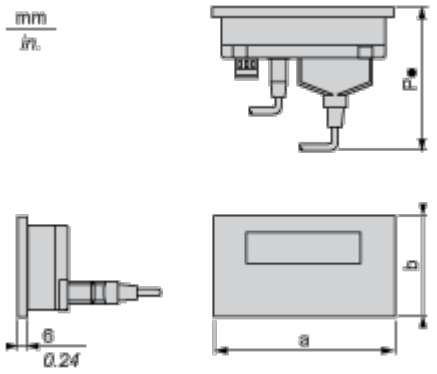

a		b		b1 (1)		P3 (2)		P4 (3)	
mm	in.	mm	in.	mm	in.	mm	in.	mm	in.
132	5.19	74	3	104	4.09	58	2.28	104	4.09

(1) With fixing clips (included with product)

(2) P3: depth with 25-way SUB-D angled cable XBTZ9680 (for Twido, TSX Micro and Premium) or XBTZ998 (for Modicon STB)

(3) P4: depth with 25-way SUB-D cable XBTZ68/Z9681(for Twido, TSX Micro and Premium)

Mounting and Clearance

Cut-out for Flush Mounting

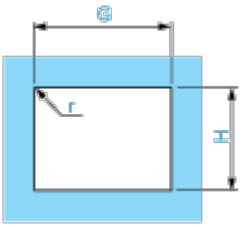

Panel thickness = 1.5...6 mm / 0.05...0.23 in.

H		G		r max.	
±0.4 mm	±0.02 in.	±0.5 mm	±0.02 in.	mm	in.
63	2.48	119.4	5	1.5	0.05