Product datasheet

Specifications

Harmony XB4. Double-headed push button head. metal. Ø22. 1 green flush marked I + 1 red flush marked O

ZB4BA7341

Price: 405.79 ZAR

Main

Range Of Product	Harmony XB4
Product Or Component Type	Head for double-headed push-button
Device Short Name	ZB4
Bezel Material	Chromium plated metal
Mounting Diameter	22 mm
Head Type	Standard
Sale Per Indivisible Quantity	1
Shape Of Signaling Unit Head	Rectangular
Type Of Operator	spring return
Operator Profile	2 flush push-buttons
Operators Description	Green "I" - red "O"

Complementary

Net Weight	0.056 kg
Resistance To High Pressure Washer	7000000 Pa at 55 °C, distance : 0.1 m
Colour Of Marking	Black marking when white caps White marking when green, red or black caps
Operator Profile	Green flush, I (white) Red flush, O (white)
Mechanical Durability	1000000 cycles
Electrical Composition Code	C3 for <6 contacts using single blocks in front mounting C4 for <6 contacts using single and double blocks in front mounting C14 for <2 contacts using single blocks in front mounting
Device Presentation	Basic element

Environment

Ambient Air Temperature For Storage	-40…70 °C
Ambient Air Temperature For Operation	-40…70 °C
Electrical Shock Protection Class	Class I conforming to IEC 60536
Ip Degree Of Protection	IP67 conforming to IEC 60529 IP69 conforming to IEC 60529 IP66 conforming to IEC 60529
Nema Degree Of Protection	NEMA 13 NEMA 4X

Excluding VAT and subject to change. Please check with your local distributor through "Where to buy"

Disclaimer: This documentation is not intended as a substitute for and is not to be used for determining suitability or reliability of these products for specific user applications

Ik Degree Of Protection	IK06 conforming to IEC 50102
Standards	IEC 60947-5-5 CSA C22.2 No 14 UL 508 IEC 60947-5-4 JIS C8201-5-1 IEC 60947-5-1 IEC 60947-1 JIS C8201-1
Product Certifications	DNV UL listed CSA GL LROS (Lloyds register of shipping) BV
Vibration Resistance	5 gn (f= 2…500 Hz) conforming to IEC 60068-2-6
Shock Resistance	30 gn (duration = 18 ms) for half sine wave acceleration conforming to IEC 60068-2-27 50 gn (duration = 11 ms) for half sine wave acceleration conforming to IEC 60068-2-27

Packing Units

Unit Type Of Package 1	PCE
Number Of Units In Package 1	1
Package 1 Height	5.500 cm
Package 1 Width	3.500 cm
Package 1 Length	5.300 cm
Package 1 Weight	56.000 g
Unit Type Of Package 2	BB1
Number Of Units In Package 2	5
Package 2 Height	5.500 cm
Package 2 Width	3.500 cm
Package 2 Length	26.600 cm
Package 2 Weight	282.000 g
Unit Type Of Package 3	S03
Number Of Units In Package 3	200
Package 3 Height	30.000 cm
Package 3 Width	30.000 cm
Package 3 Length	40.000 cm
Package 3 Weight	11.768 kg

Contractual warranty

Warranty	18 months

Sustainability

Green Premium™ label is Schneider Electric's commitment to delivering products with best-in-class environmental performance. Green Premium promises compliance with the latest regulations, transparency on environmental impacts, as well as circular and low-CO_2 products.

Guide to assessing product sustainability is a white paper that clarifies global eco-label standards and how to interpret environmental declarations.

Learn more about Green Premium >

Guide to assess a product's sustainability >

Transparency RoHS/REACh

Well-being performance

Reach Free Of Svhc	
Toxic Heavy Metal Free	
Mercury Free	
Rohs Exemption Information	Yes

Certifications & Standards

Reach Regulation	REACh Declaration
Eu Rohs Directive	Pro-active compliance (Product out of EU RoHS legal scope) EU RoHS Declaration
China Rohs Regulation	China RoHS declaration
Environmental Disclosure	Product Environmental Profile
Circularity Profile	End of Life Information

Dimensions Drawings

Dimensions

Without Boot

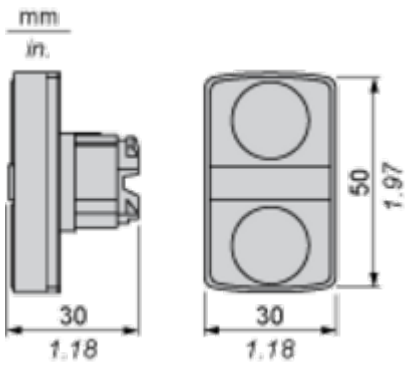

Without Boot ZBA708

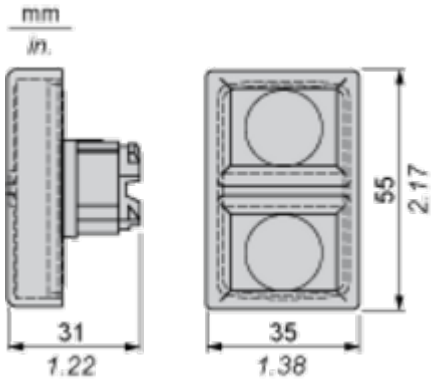

Mounting and Clearance

Panel Cut-out for Pushbuttons, Switches and Pilot Lights (Finished Holes, Ready for Installation)

Connection by Screw Clamp Terminals or Plug-in Connectors or on Printed Circuit Board	Connection by Faston Connectors
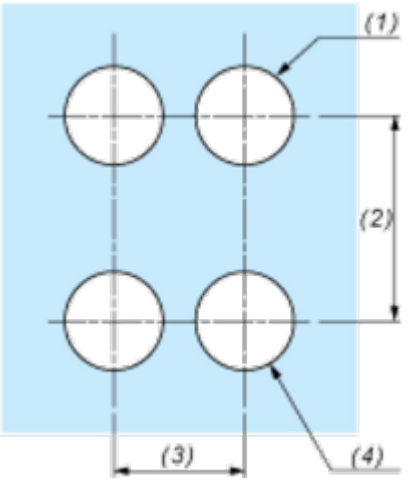	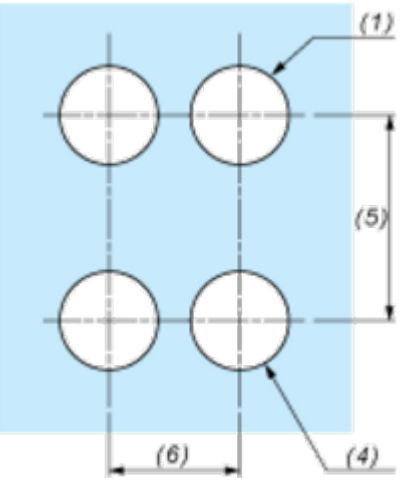

(1) Diameter on finished panel or support
(2) 40 mm min. / 1.57 in. min.
(3) 30 mm min. / 1.18 in. min.
(4) Ø 22.5 mm / 0.89 in. recommended (Ø 22.3 mm $_{0}^{+0.4}$ / 0.88 in. $_{0}^{+0.016}$)
(5) 45 mm min. / 1.78 in. min.
(6) 32 mm min. / 1.26 in. min.

Pushbuttons, Switches and Pilot Lights for Printed Circuit Board Connection

Panel Cut-outs (Viewed from Installer's Side)

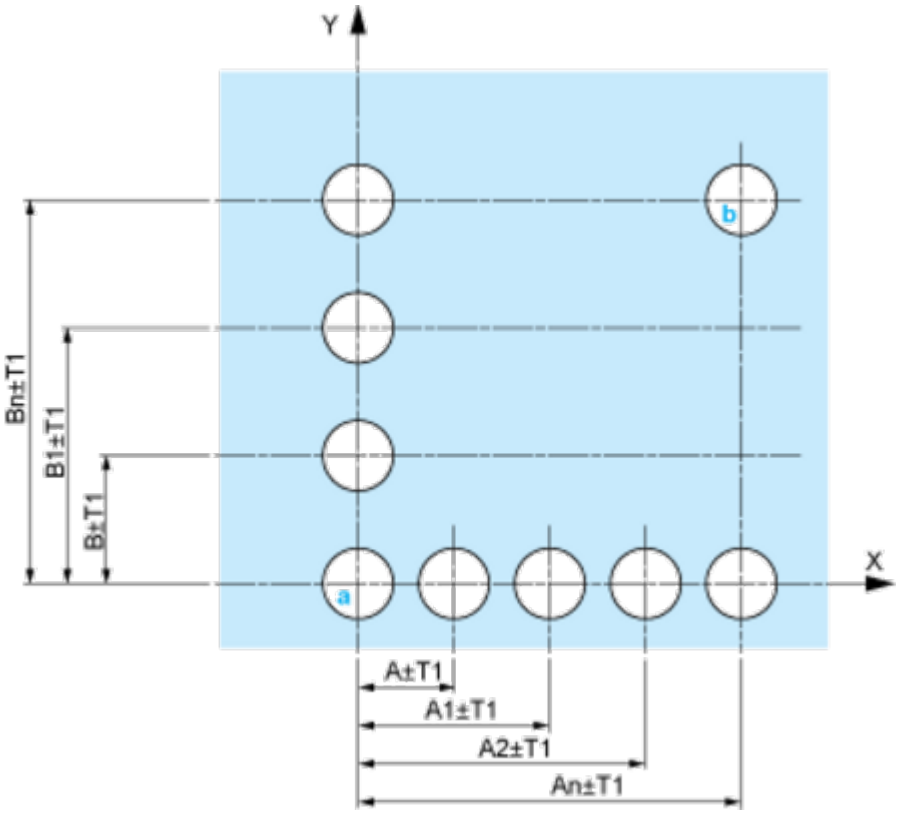

A: 30 mm min. / 1.18 in. min.
B: 40 mm min. / 1.57 in. min.

Printed Circuit Board Cut-outs (Viewed from Electrical Block Side)

Dimensions in mm

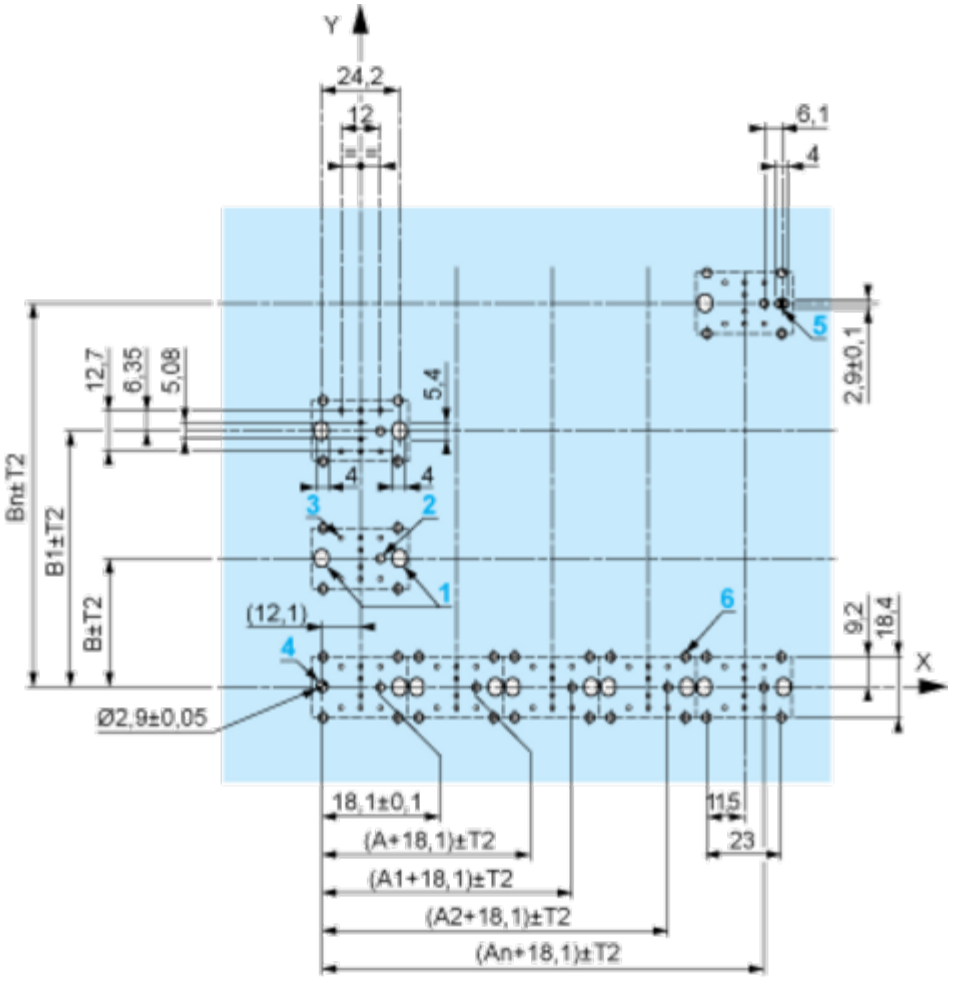

A: 30 mm min.
B: 40 mm min.
Dimensions in in.

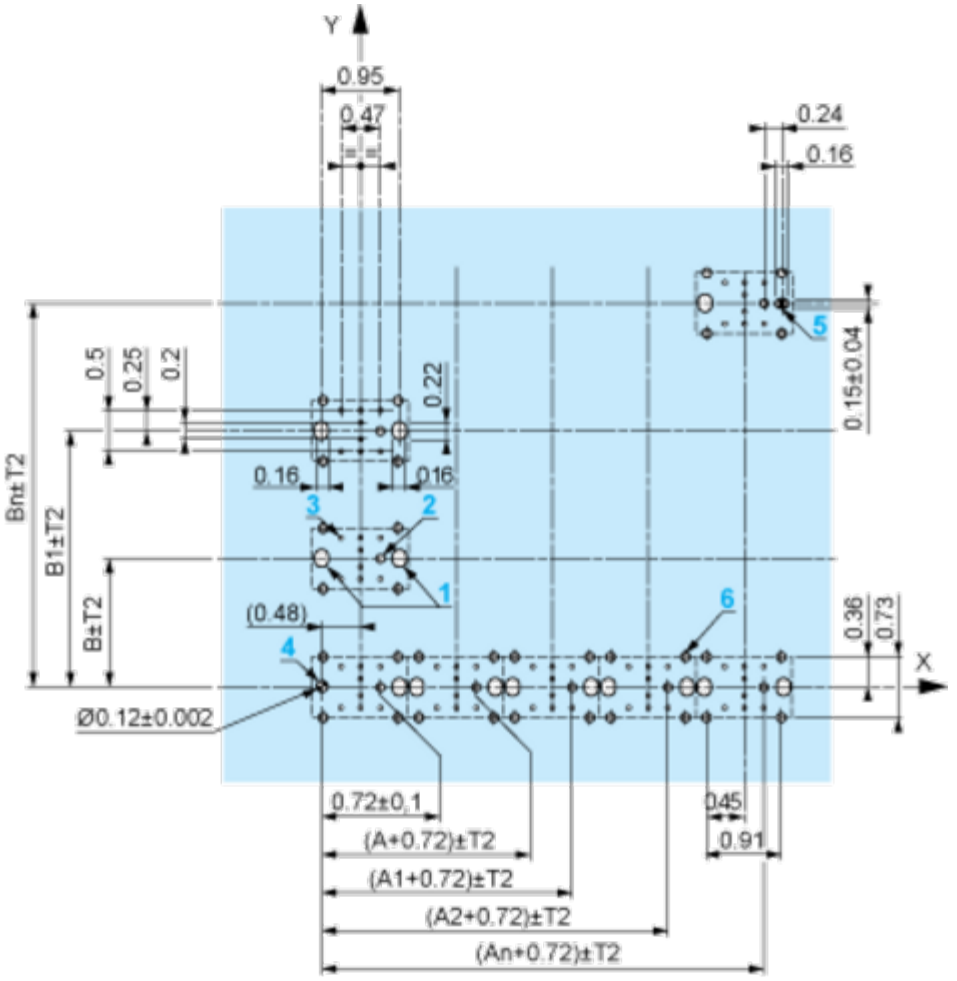

A: 1.18 in. min.
B: 1.57 in. min.

General Tolerances of the Panel and Printed Circuit Board

The cumulative tolerance must not exceed 0.3 mm / 0.012 in: T1 + T2 = 0.3 mm max.

Installation Precautions

- Minimum thickness of circuit board: 1.6 mm / 0.06 in.
- Cut-out diameter: 22.4 mm ± 0.1 / 0.88 in. ± 0.004
- Orientation of body/fixing collar ZB4 BZ009: ± 2°30' (excluding cut-outs marked **a** and **b**).
- Tightening torque of screws ZBZ 006: 0.6 N.m (5.3 lbf.in) max.
- Allow for one ZB4 BZ079 fixing collar/pillar and its fixing screws:
  - every 90 mm / 3.54 in. horizontally (X), and 120 mm / 4.72 in. vertically (Y).
  - with each selector switch head (ZB4 BD•, ZB4 BJ•, ZB4 BG•).

The fixing centers marked **a** and **b** are diagonally opposed and must align with those marked **4** and **5**.

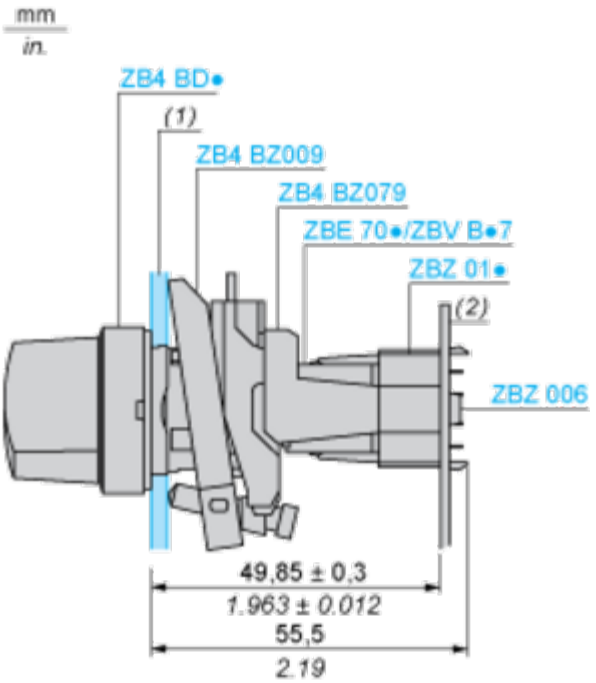

(1) Panel
(2) Printed circuit board

Mounting of Adapter (Socket) ZBZ 01•

- **1** 2 elongated holes for ZBZ 006 screw access
- **2** 1 hole Ø 2.4 mm ± 0.05 / 0.09 in. ± 0.002 for centring adapter ZBZ 01•
- **3** 8 × Ø 1.2 mm / 0.05 in. holes
- **4** 1 hole Ø 2.9 mm ± 0.05 / 0.11 in. ± 0.002, for aligning the printed circuit board (with cut-out marked **a**)
- **5** 1 elongated hole for aligning the printed circuit board (with cut-out marked **b**)
- **6** 4 holes Ø 2.4 mm / 0.09 in. for clipping in adapter ZBZ 01•

Dimensions An + 18.1 relate to the Ø 2.4 mm ± 0.05 / 0.09 in. ± 0.002 holes for centring adapter ZBZ 01•.

Technical Description

Electrical Composition Corresponding to Code C3

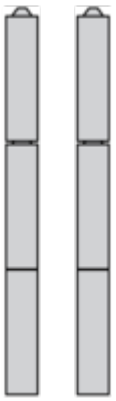

Electrical Composition Corresponding to Code C4

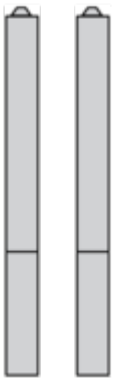

Electrical Composition Corresponding to Codes C14, SF2 and SR2

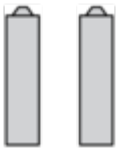

Legend

Single contact

Double contact

Light block

Possible location