Product datasheet

Specifications

Harmony XB4. Illuminated push button head. metal. flush. green. Ø22. spring return. plain lens for BA9s bulb

ZB4BW33

Price: 285.96 ZAR

Main

Range Of Product	Harmony XB4
Product Or Component Type	Head for illuminated push-button
Device Short Name	ZB4
Product Compatibility	BA 9s
Bezel Material	Chromium plated metal
Head Type	Standard
Mounting Diameter	22.5 mm
Sale Per Indivisible Quantity	1
Shape Of Signaling Unit Head	Round
Type Of Operator	spring return
Operator Profile	Green flush, unmarked
Operator Additional Information	With plain lens
Cap/Operator Or Lens Colour	Green

Complementary

Cad Overall Width	29 mm
Cad Overall Height	29 mm
Cad Overall Depth	32 mm
Net Weight	0.027 kg
Resistance To High Pressure Washer	7000000 Pa at 55 °C, distance : 0.1 m
Mechanical Durability	10000000 cycles
Electrical Composition Code	M7 for <6 contacts using single blocks in front mounting with BA 9s M8 for <6 contacts using single and double blocks in front mounting with BA 9s M9 for <2 contacts using single blocks in front mounting with BA 9s and transformer
Device Presentation	Basic sub-assemblies

Environment

Protective Treatment	TH
Ambient Air Temperature For Storage	-40…70 °C
Ambient Air Temperature For Operation	-40…55 °C
Overvoltage Category	Class I conforming to IEC 60536

Excluding VAT and subject to change. Please check with your local distributor through "Where to buy"

Disclaimer: This documentation is not intended as a substitute for and is not to be used for determining suitability or reliability of these products for specific user applications

Ip Degree Of Protection	IP66 conforming to IEC 60529 IP67 IP69 IP69K
Nema Degree Of Protection	NEMA 13 NEMA 4X
Ik Degree Of Protection	IK06 conforming to IEC 62262
Standards	UL 508 IEC 60947-1 JIS C8201-5-1 IEC 60947-5-5 CSA C22.2 No 14 IEC 60947-5-1 IEC 60947-5-4 JIS C8201-1
Product Certifications	BV CSA UL listed GL LROS (Lloyds register of shipping) DNV
Vibration Resistance	5 gn (f= 2…500 Hz) conforming to IEC 60068-2-6
Shock Resistance	30 gn (duration = 18 ms) for half sine wave acceleration conforming to IEC 60068-2-27 50 gn (duration = 11 ms) for half sine wave acceleration conforming to IEC 60068-2-27

Packing Units

Unit Type Of Package 1	PCE
Number Of Units In Package 1	1
Package 1 Height	5.6 cm
Package 1 Width	3.4 cm
Package 1 Length	4.5 cm
Package 1 Weight	28 g
Unit Type Of Package 2	S01
Number Of Units In Package 2	50
Package 2 Height	15 cm
Package 2 Width	15 cm
Package 2 Length	40 cm
Package 2 Weight	1.6 kg
Unit Type Of Package 3	P06
Number Of Units In Package 3	1600
Package 3 Height	77 cm
Package 3 Width	80 cm
Package 3 Length	60 cm
Package 3 Weight	59.7 kg

Contractual warranty

Warranty	18 months

Sustainability

Green Premium™ label is Schneider Electric's commitment to delivering products with best-in-class environmental performance. Green Premium promises compliance with the latest regulations, transparency on environmental impacts, as well as circular and low-CO_2 products.

Guide to assessing product sustainability is a white paper that clarifies global eco-label standards and how to interpret environmental declarations.

Learn more about Green Premium >

Guide to assess a product's sustainability >

Transparency RoHS/REACh

Well-being performance

Reach Free Of Svhc	
Toxic Heavy Metal Free	
Mercury Free	
Rohs Exemption Information	Yes

Certifications & Standards

Reach Regulation	REACh Declaration
Eu Rohs Directive	Pro-active compliance (Product out of EU RoHS legal scope) EU RoHS Declaration
China Rohs Regulation	China RoHS declaration
Environmental Disclosure	Product Environmental Profile
Circularity Profile	End of Life Information

Dimensions Drawings

Dimensions

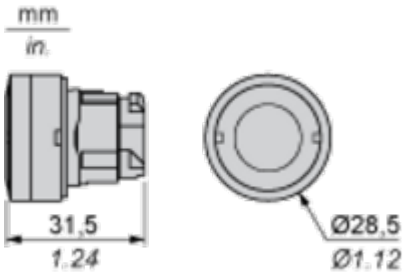

Mounting and Clearance

Panel Cut-out for Pushbuttons, Switches and Pilot Lights (Finished Holes, Ready for Installation)

Connection by Screw Clamp Terminals or Plug-in Connectors or on Printed Circuit Board	Connection by Faston Connectors
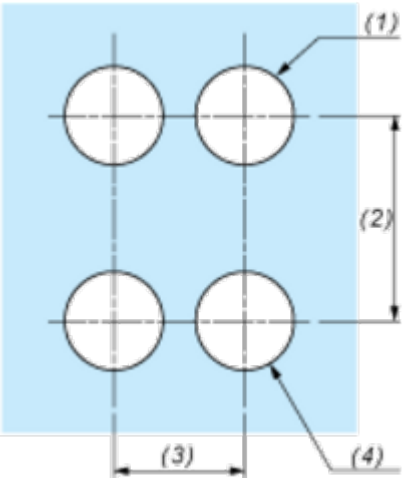	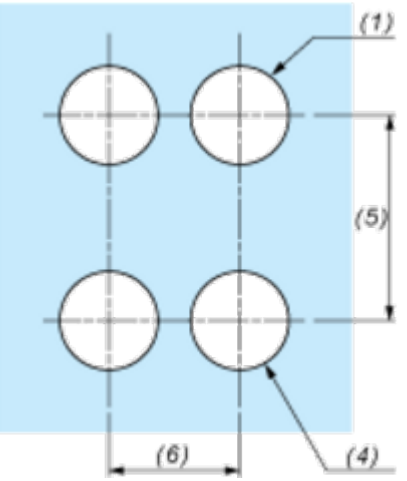

(1) Diameter on finished panel or support
(2) 40 mm min. / 1.57 in. min.
(3) 30 mm min. / 1.18 in. min.
(4) Ø 22.5 mm / 0.89 in. recommended (Ø 22.3 mm $_{0}^{+0.4}$ / 0.88 in. $_{0}^{+0.016}$)
(5) 45 mm min. / 1.78 in. min.
(6) 32 mm min. / 1.26 in. min.

Pushbuttons, Switches and Pilot Lights for Printed Circuit Board Connection

Panel Cut-outs (Viewed from Installer's Side)

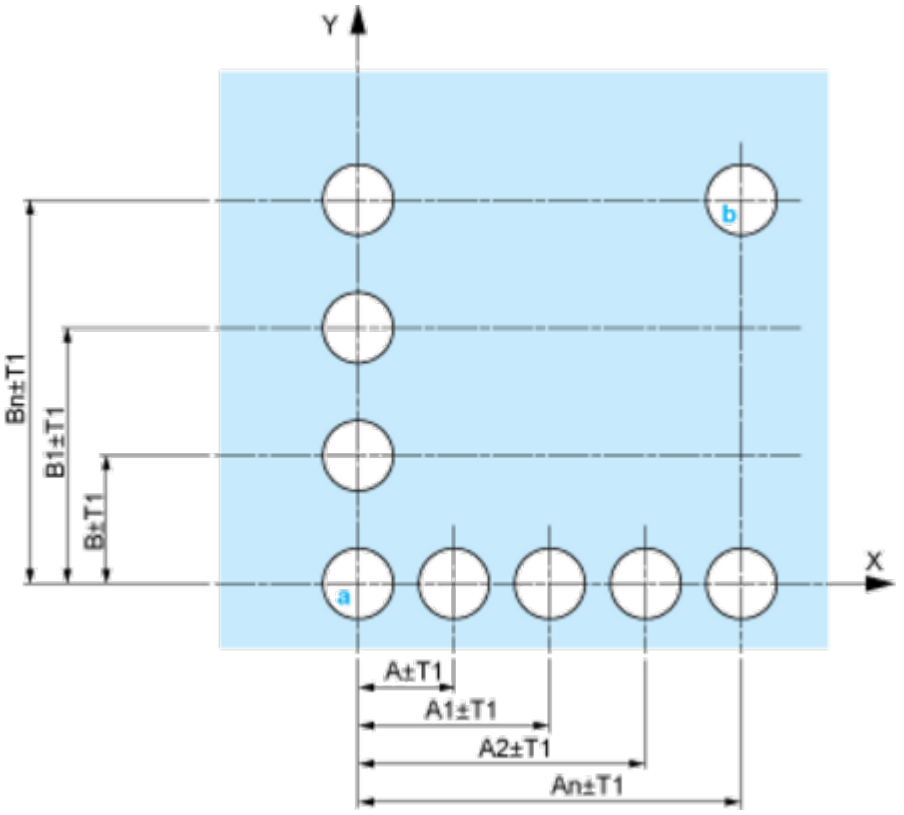

A: 30 mm min. / 1.18 in. min.
B: 40 mm min. / 1.57 in. min.

Printed Circuit Board Cut-outs (Viewed from Electrical Block Side)

Dimensions in mm

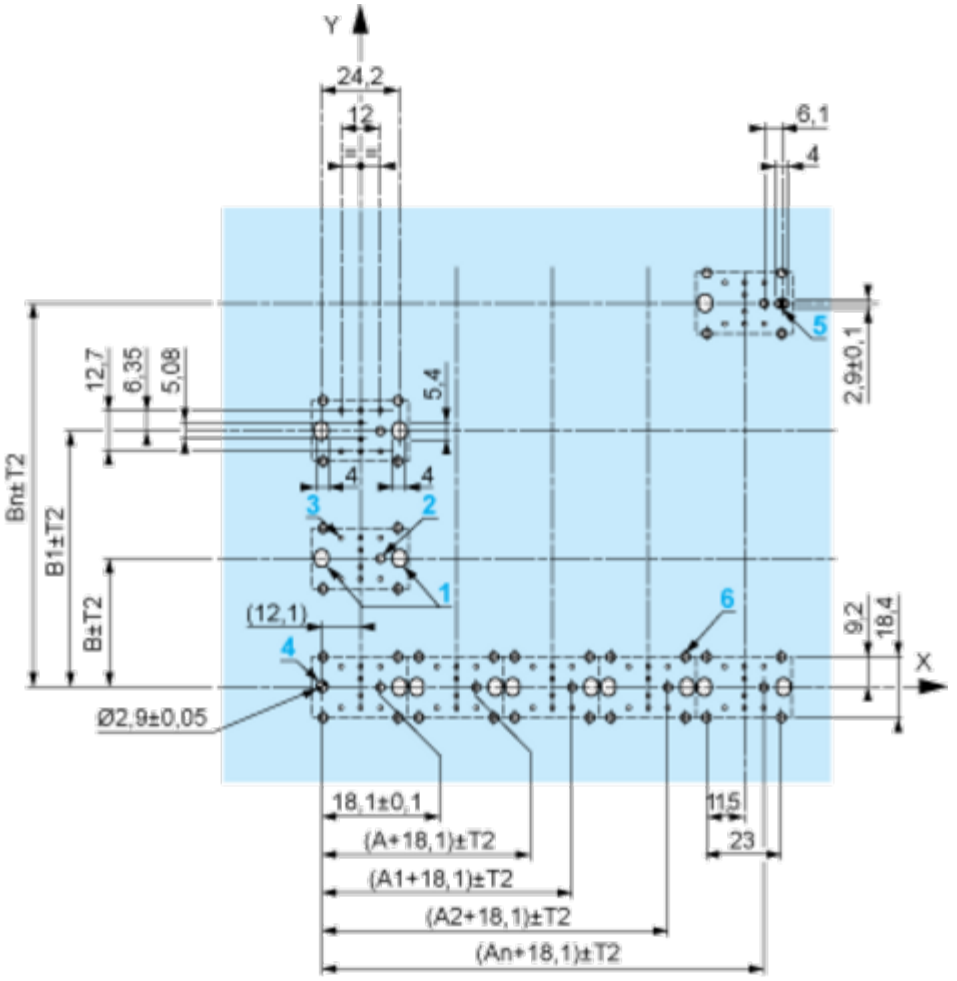

A: 30 mm min.
B: 40 mm min.
Dimensions in in.

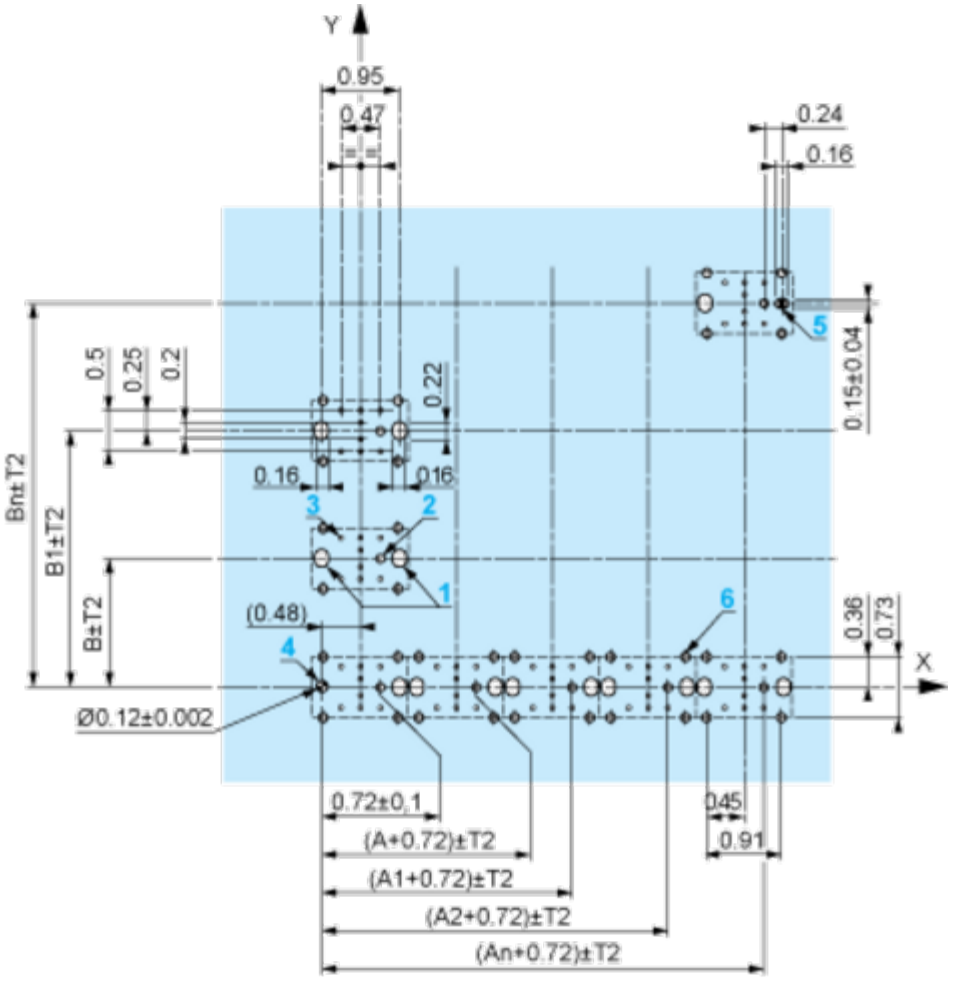

A: 1.18 in. min.
B: 1.57 in. min.

General Tolerances of the Panel and Printed Circuit Board

The cumulative tolerance must not exceed 0.3 mm / 0.012 in: T1 + T2 = 0.3 mm max.

Installation Precautions

- Minimum thickness of circuit board: 1.6 mm / 0.06 in.
- Cut-out diameter: 22.4 mm ± 0.1 / 0.88 in. ± 0.004
- Orientation of body/fixing collar ZB4 BZ009: ± 2°30' (excluding cut-outs marked **a** and **b**).
- Tightening torque of screws ZBZ 006: 0.6 N.m (5.3 lbf.in) max.
- Allow for one ZB4 BZ079 fixing collar/pillar and its fixing screws:
  - every 90 mm / 3.54 in. horizontally (X), and 120 mm / 4.72 in. vertically (Y).
  - with each selector switch head (ZB4 BD•, ZB4 BJ•, ZB4 BG•).

The fixing centers marked **a** and **b** are diagonally opposed and must align with those marked **4** and **5**.

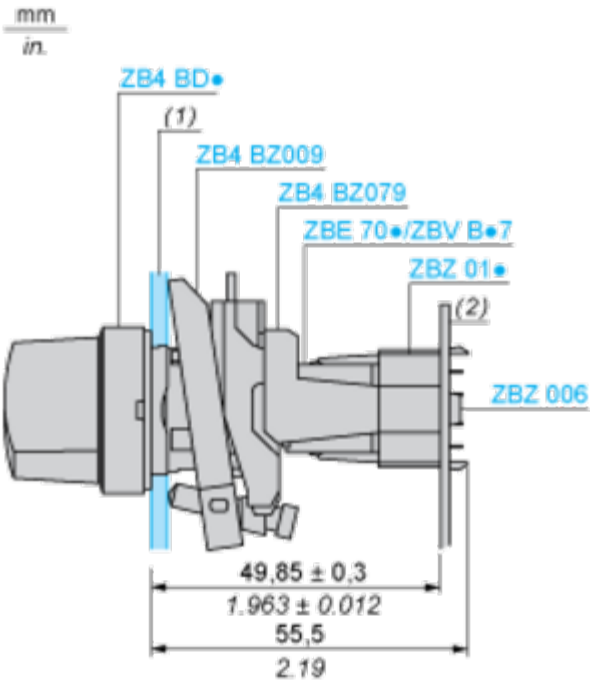

(1) Panel
(2) Printed circuit board

Mounting of Adapter (Socket) ZBZ 01•

- **1** 2 elongated holes for ZBZ 006 screw access
- **2** 1 hole Ø 2.4 mm ± 0.05 / 0.09 in. ± 0.002 for centring adapter ZBZ 01•
- **3** 8 × Ø 1.2 mm / 0.05 in. holes
- **4** 1 hole Ø 2.9 mm ± 0.05 / 0.11 in. ± 0.002, for aligning the printed circuit board (with cut-out marked **a**)
- **5** 1 elongated hole for aligning the printed circuit board (with cut-out marked **b**)
- **6** 4 holes Ø 2.4 mm / 0.09 in. for clipping in adapter ZBZ 01•

Dimensions An + 18.1 relate to the Ø 2.4 mm ± 0.05 / 0.09 in. ± 0.002 holes for centring adapter ZBZ 01•.

Technical Description

Electrical Composition Corresponding to Codes M1 and M7

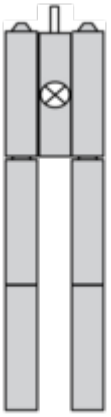

Electrical Composition Corresponding to Codes M2 and M8

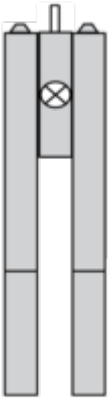

Electrical Composition Corresponding to Code M9

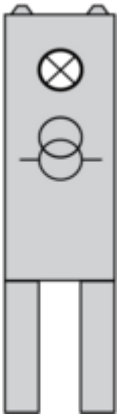

Legend

Single contact

Double contact

Light block

Possible location